Rexroth
Bosch Group

3/2, 4/2 and 4/3 directional valves, internally pilot operated, externally pilot operated

RE 24751/08.08
Replaces: 02.03

Types 4WEH and 4WH


H6092+5589

Sizes 10 to 32
Component series 4X; 6X; 7X
Maximum operating pressure 350 bar *[5076 psi]*
Maximum flow 1100 l/min *[290 US gpm]*

Table of contents

Information on available spare parts:
www.boschrexroth.com/spc

Features

- 2 types of actuation:
  - Electrohydraulic (type WEH)
  - Hydraulic (type WH)
- For subplate mounting
- Porting pattern to ISO 4401 and NFPA T3.5.1 R2
- For subplates to data sheets RE 45054 to RE 45060 (separate order), see page 32
- Spring- or pressure-centering, spring end position or hydraulic end position
- Wet-pin DC or AC voltage solenoids, optional
- Manual override, optional
- Electrical connection as individual or central connection, see RE 23178 and RE 08010
- Switching time adjustment, optional
- Pre-load valve in channel P of main valve, optional
- Stroke adjustment of main spool, optional
- Stroke adjustment and/or end position control, optional
- Inductive position switches and proximity sensors (contactless), see RE 24830

Ordering code

Up to 280 bar	**= No code**
Up to 350 bar	**= H –**
3-way design	**= 3**
4-way design	**= 4**
Types of actuation	
Electrohydraulic	**= WEH**
Hydraulic	**= WH**
Size	
NG10	**= 10**
NG16	**= 16**
NG25 (type 4W.H 22 .7X/…)	**= 22**
NG25 (type 4W.H 25 .6X/…)	**= 25**
NG32	**= 32**
Spool return in main valve	
By springs	**= No code**
Hydraulic [1]	**= H**
For spool symbols, see pages 4 and 5	
Component series	
40 to 49 – NG10 (40 to 49: unchanged installation and connection dimensions)	**= 4X**
60 to 69 – NG25 (4W.H 25.) and NG32 (60 to 69: unchanged installation and connection dimensions)	**= 6X**
70 to 79 – NG16 (series 72 or higher) and NG25 (4W.H 22.) (70 to 79: unchanged installation and connection dimensions)	**= 7X**
Spool return in pilot valve with 2 spool positions and 2 solenoids	
Only possible with spools A, B, C, D, K, Z and hydraulic spool return in main valve:	
With spring return	**= No code**
Without spring return	**= O**
Without spring return **with** detent [2]	**= OF**
Pilot valve [2]	
High-performance valve (RE 23178)	**= 6E**
DC voltage 24 V [2]	**= G24**
AC voltage 230 V 50/60 Hz [2]	**= W230**
For further voltages, frequencies and electric data, see data sheet RE 23178	
Without manual override	**= No code**
With manual override	**= N**
With concealed manual override	**= N9**
External pilot oil supply, external pilot oil drain [3]	**= No code**
Internal pilot oil supply, external pilot oil drain [3; 4]	**= E**
Internal pilot oil supply, internal pilot oil drain [4]	**= ET**
External pilot oil supply, internal pilot oil drain [3]	**= T**
(for type 4WH… **only "No code"** possible!)	
(Variants "ET" and "T" for 3-position valve, pressure-centering **only** possible, if $p_{St} \geq 2 \times p_{Tank} + p_{St\,min}$!)	

p_{St} = pilot pressure
$p_{St\,min}$ = pilot pressure, min,
p_{Tank} = tank pressure
$p_{ö}$ = cracking pressure

Standard types and components are shown in the EPS (standard price list).

For explanation of footnotes, see page 3!

Further details in clear text

Seal material

No code = NBR seals
V = FKM seals
(other seals on request)
⚠ **Attention!**
Observe compatibility of seals with hydraulic fluid used!

No code = **Without** pressure reducing valve
D3 [5] **=** **With** pressure reducing valve

Pre-load valve (not for NG10) [2; 5]

No code = **Without** pre-load valve
P4,5 = **With** pre-load valve ($p_{ö}$ = 4.5 bar *[65 psi]*)

Throttle insert [2]

No code = Without throttle insert
B08 = Throttle Ø 0.8 mm *[0.0315 inch]*
B10 = Throttle Ø 1.0 mm *[0.0394 inch]*
B12 = Throttle Ø 1.2 mm *[0.0472 inch]*
B15 = Throttle Ø 1.5 mm *[0.0591 inch]*
B20 = Throttle Ø 2.0 mm *[0.0787 inch]*
B25 = Throttle Ø 2.5 mm *[0.0984 inch]*

Stroke adjustment
For ordering code, see pages 34 and 35

Spool position monitoring

No code = Without position switch
QMAG24 = Monitored spool position “a“
QMBG24 = Monitored spool position “b“
QMABG24 = Monitored spool positions “a“ and “b“
QM0G24 = Monitored rest position
For further details, see RE 24830

Electrical connection [2]

K4 [6] **=** Without mating connector, individual connection with component plug to DIN EN 175301-803
For further electrical connections, see RE 23178 and RE 08010

No code = **Without** switching time adjustment
S = Switching time adjustment as meter-in control
S2 = Switching time adjustment as meter-out control

[1] – 2 spool positions (hydraulic end position): Spools C, D, K, Z, Y only
– 3 spool positions (hydraulically centered): Only with NG16, NG25 (type 4W.H **25** …) and NG32

[2] Only with electrohydraulic actuation

[3] Pilot oil supply X or drain Y **external**:
– In the case of NG10, variant SO30 must be provided for the use of sandwich plates. Code SO30 must be entered at the end of the type code (sandwich plate).
– Make sure that the permissible operating parameters of the pilot oil are not exceeded (see RE 23178)!
– Maximum pilot pressure: Please observe page 14!

[4] Internal pilot oil **supply** (version “ET“ and “E“):
– Minimum pilot pressure: Please observe page 15!
– To avoid impermissibly high pressure peaks, a **throttle insert “B10“** must be provided in the P port of the pilot valve (see page 13).
– In conjunction with version “H-“, **pressure reducing valve “D3“** must be provided additionally.

[5] Only in conjunction with throttle insert **“B10“**

[6] Mating connectors, separate order, see RE 23178

Spool symbols: 2 spool positions

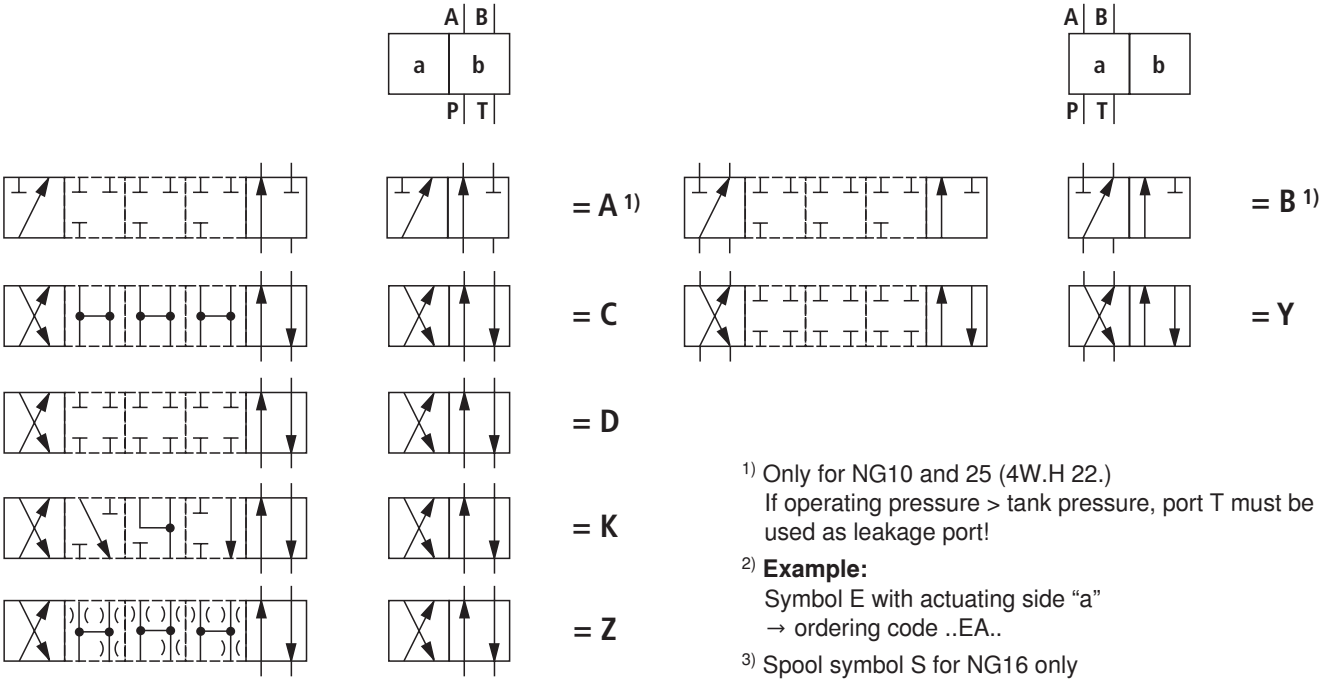

1) Only for NG10 and 25 (4W.H 22.)
If operating pressure > tank pressure, port T must be used as leakage port!

2) **Example:**
Symbol E with actuating side “a”
→ ordering code ..EA..

3) Spool symbol S for NG16 only

Ordering code		Type of actuation	
Spool symbol	**Spool return**	**Hydraulic** Type WH	**Electrohydraulic** Type WEH
A, C, D, K, Z	**../..**	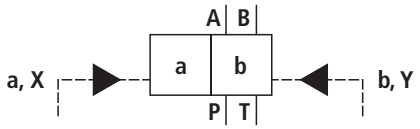	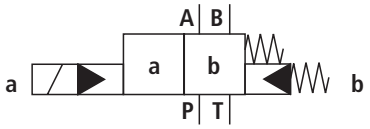
	..H../..	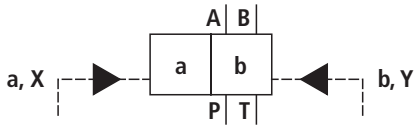	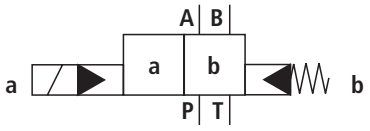
	..H../O		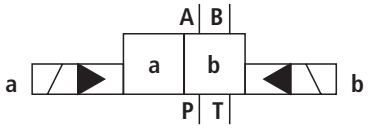
	..H../OF		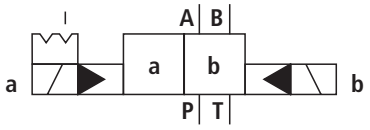
B, Y	**../..**	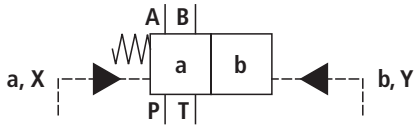	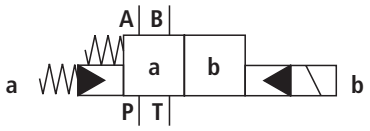
	..H../..		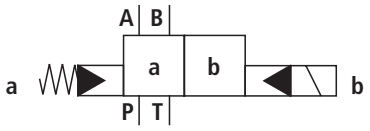

Spool symbols: 3 spool positions

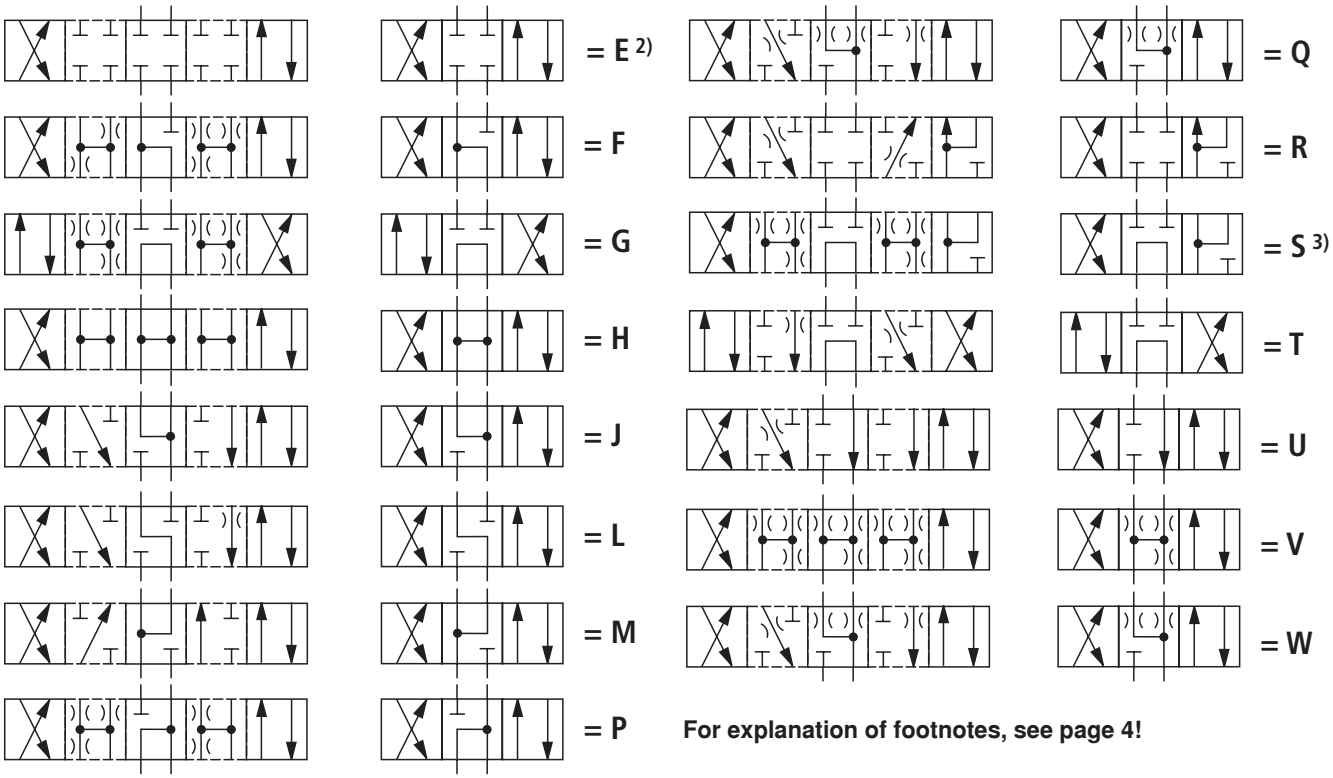

For explanation of footnotes, see page 4!

Ordering code			Type of actuation	
Spool symbol	**Actuating side**	**Spool return**	**Hydraulic** Type WH	**Electrohydraulic** Type WEH
E, F, G, H, J, L, M, Q, R, S, T, U, V, W		**../..**	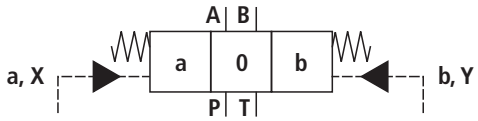	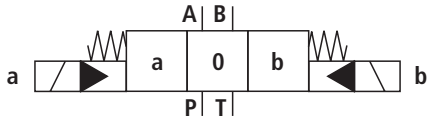
	.A			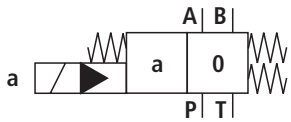
	.B			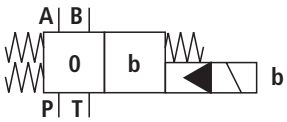
		..H../..	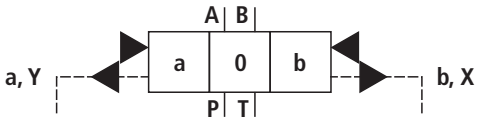	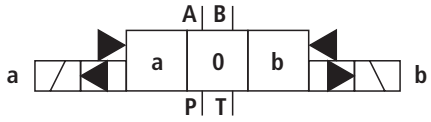
		H.A		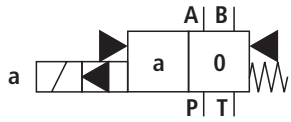
		H.B		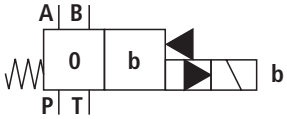

Symbols for valves with 2 spool positions

	Valve with spring end position	Valve with hydraulic end position		
X = external; Y = external	Type 4WEH…/..	Type 4WEH . H../...	Type 4WEH . H../O...	Type 4WEH . H../OF...
X = internal; Y = external	Type 4WEH…/…E…	Type 4WEH . H../…E…	Type 4WEH . H../O…E…	Type 4WEH . H../OF…E…
X = internal; Y = internal	Type 4WEH…/…ET…	Type 4WEH . H../…ET…	Type 4WEH . H../O…ET…	Type 4WEH . H../OF…ET…

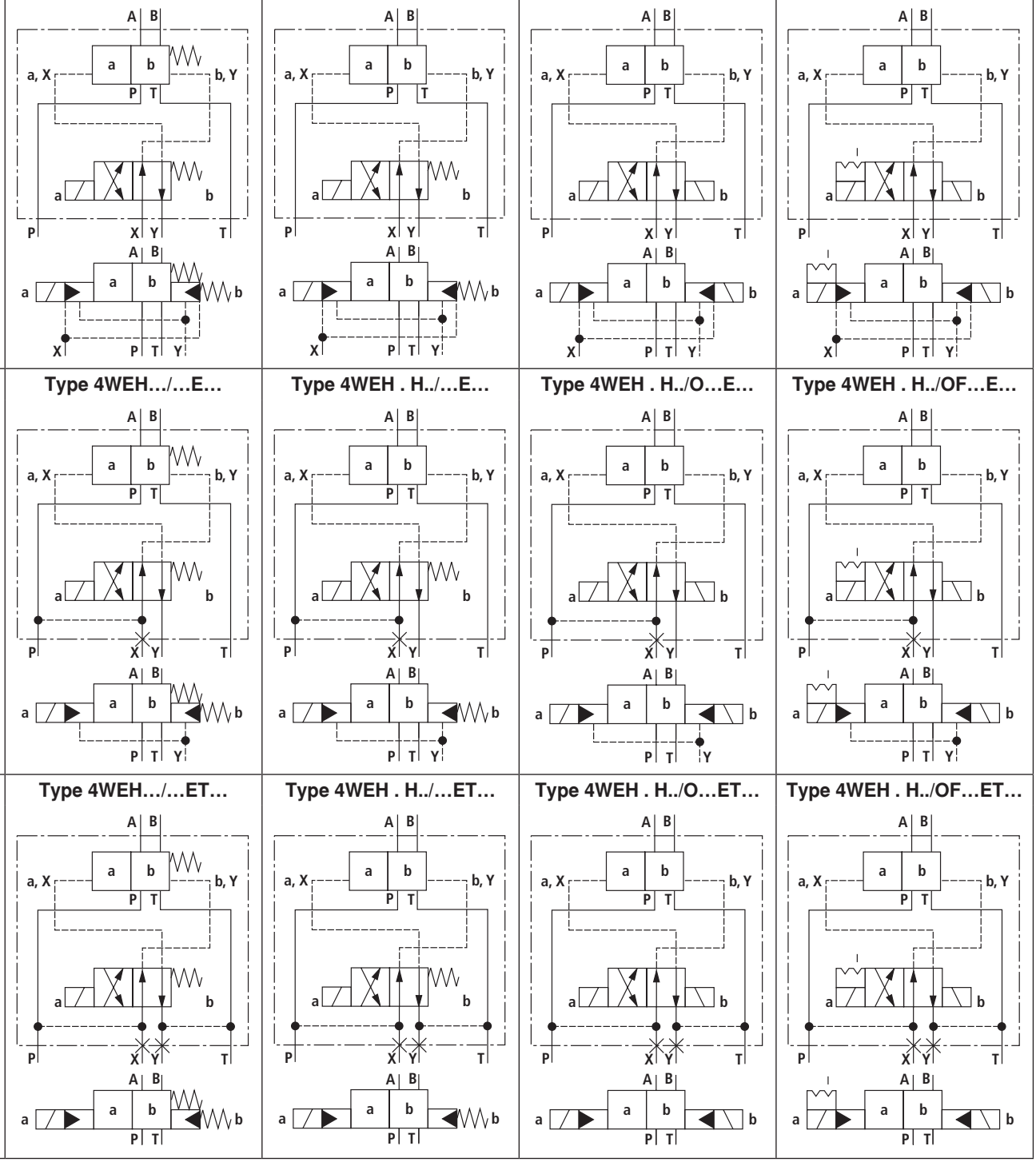

Symbols for valves with 2 spool positions

	Valve with spring end position	Valve with hydraulic end position		
	Type 4WEH…/…T…	Type 4WEH . H../…T…	Type 4WEH . H../O…T…	Type 4WEH . H../OF…T…
X = external; Y = internal	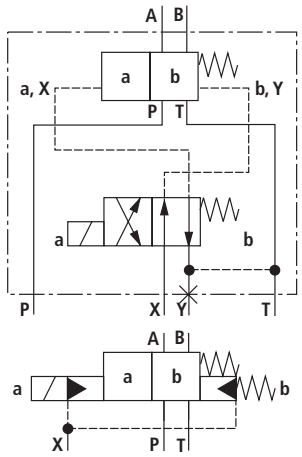	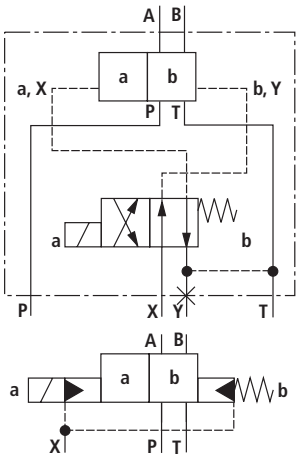	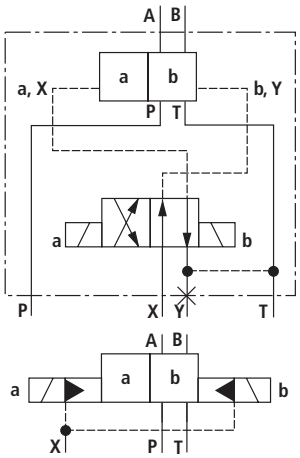	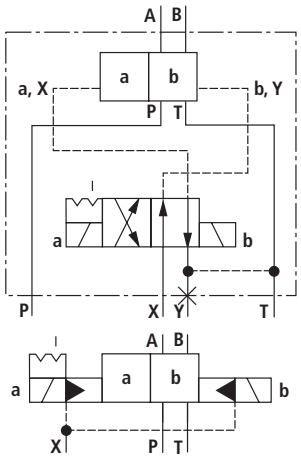

Symbols for valves with 3 spool positions

	Valve with spring-centered zero position	Valve with pressure-centered zero position only NG16, 25 (type 4W.H **25** .6X/…) and 32
	Type 4WEH…/…	Type 4WEH . H../…
X = external; Y = external	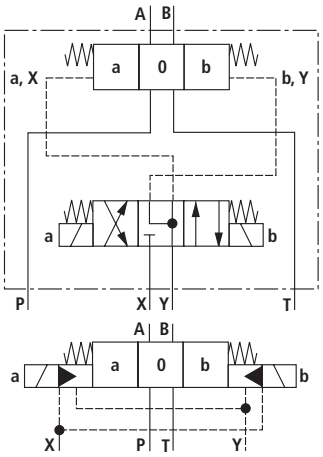	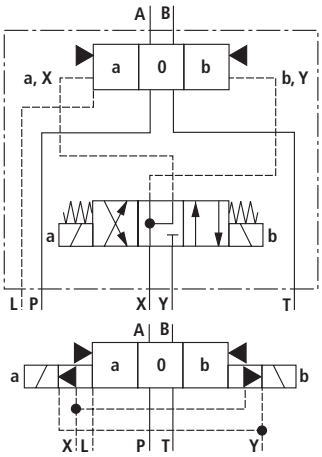
	Type 4WEH…/…E…	Type 4WEH . H../…E…
X = internal; Y = external	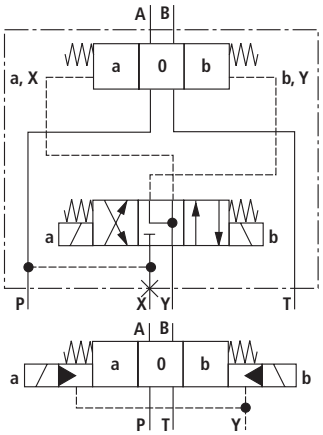	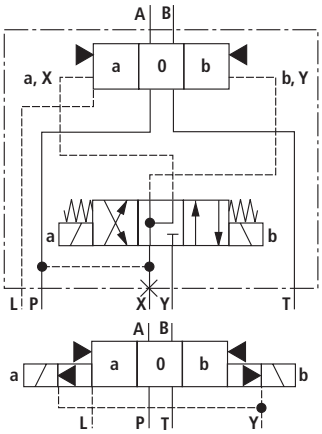

Symbols for valves with 3 spool positions

	Valve with spring-centered zero position	Valve with pressure-centered zero position nur NG16, 25 (Type 4W.H **25** .6X/…) and 32
X = internal; **Y** = internal	**Type 4WEH…/…ET…** 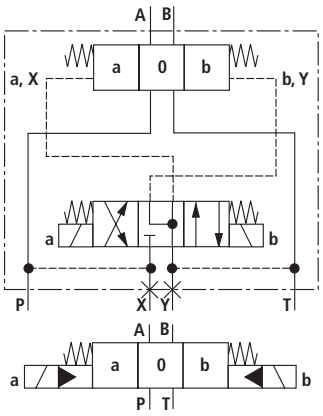 	3-position valves, pressure-centered, preferably with external pilot oil supply and/or drain (“No code“, “E“) For the preconditions for internal pilot oil supply and/or drain (“ET“, “T“), see pages 4 and 15.
X = external; **Y** = internal	**Type 4WEH…/…T…** 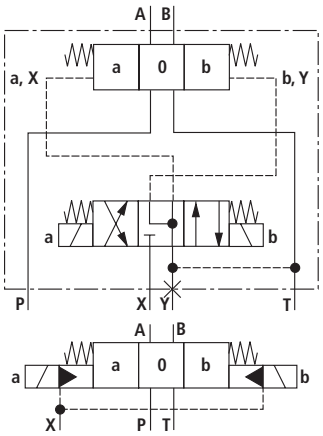 	

Function, section: Type 4WEH

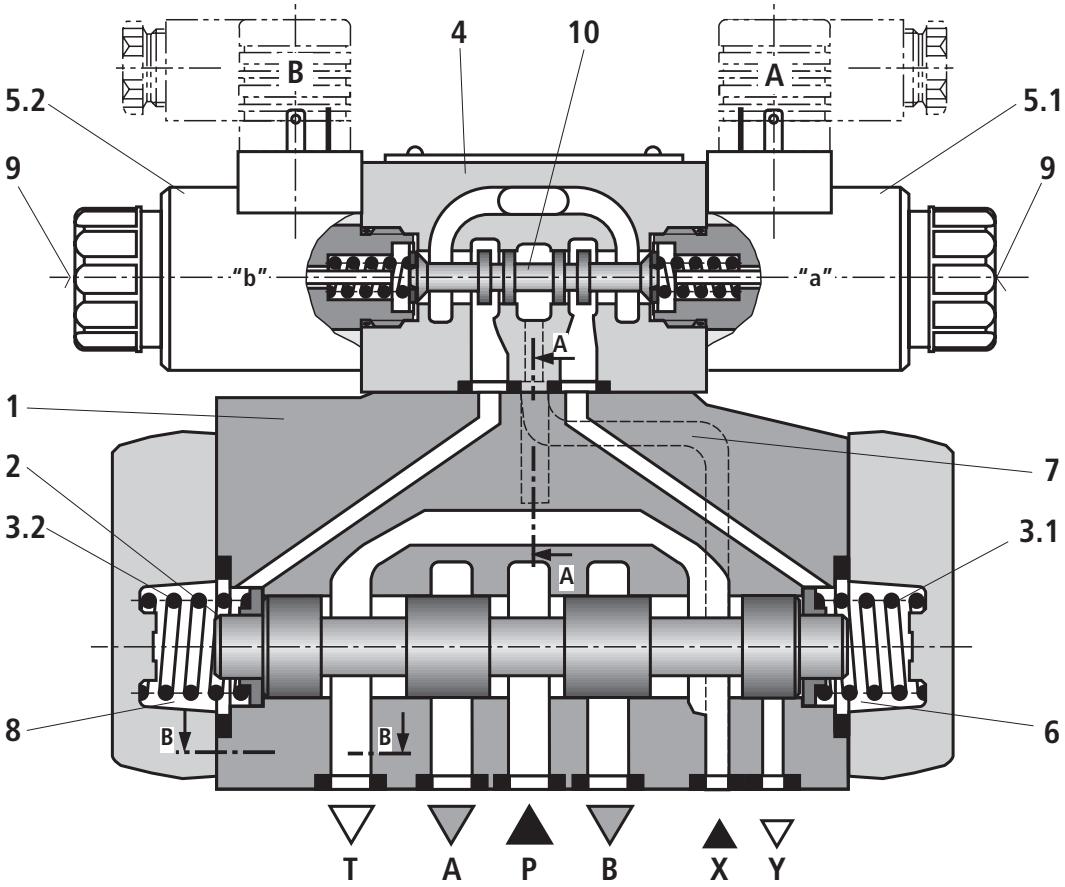

Directional valves of type 4WEH…

Valves of type WEH are directional spool valves with electro-hydraulic actuation. The control the start, stop and direction of a flow.

These directional valves basically consist of the main valve with housing (1), main control spool (2), one or two return springs (3.1) and (3.2), as well as pilot valve (4) with one or two solenoids “a“ (5.1) and/or “b“ (5.2).

Main control spool (2) in the main valve is held in the zero or initial position by springs or through pressurization. In the de-pressurized condition, the two spring chambers (6) and (8) are pressureless connected to the tank via pilot valve (4). The pilot valve is supplied with pilot oil via pilot line (7). The supply can be provided internally or externally (externally via port X).

When the pilot valve is operated, e.g. solenoid “a“, pilot spool (10) is pushed to the left and spring chamber (8) is therefore pressurized to pilot pressure. Spring chamber (6) remains pressureless.

The pilot pressure acts on the left side of main control spool (2) and shifts the latter against spring (3.1). In the main valve, port P is consequently connected to B and A to T.

When the solenoid is de-energized, pilot spool (10) returns to its starting position (except for impulse spool). Spring chamber (8) is unloaded to the tank.

The pilot oil is drained internally (via channel T) or externally (via channel Y).

An optional manual override (9) allows pilot spool (10) to be moved without energization of the solenoid.

☞ **Note!**

Return springs (3.1) and (3.2) in spring chambers (6) and (8) hold the main control spool (2) in the central position, even if the valve is arranged, for example, vertically.

Pilot oil supply (sections A – A and B – B),
see pages 12 and 13.

Function, section: Type 4WH

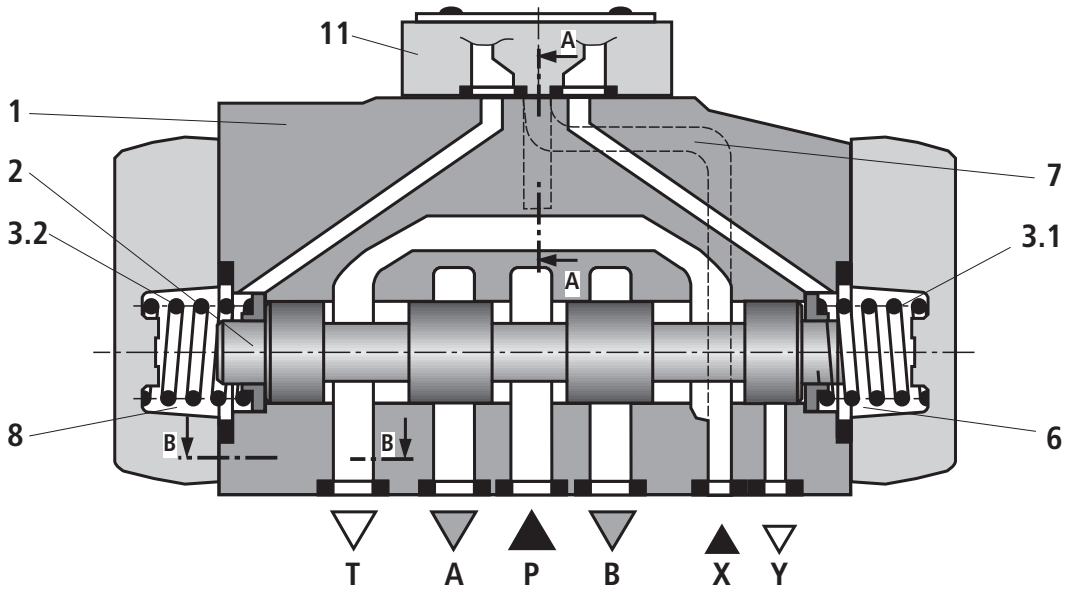

Directional valves of type 4WH…

Valves of type WH are directional spool valves with hydraulic actuation. They control the start, stop and direction of a flow.

These directional valves basically consist of valve housing (1), main control spool (2), one or two return springs (3.1) and (3.2) on valves with spring return or spring centering, as well as reconnection plate (11).

The main control spool (2) is actuated directly through pressurization.

Main control spool (2) is held in the zero or initial position by springs or through pressurization. The pilot oil is supplied and drained externally (see page 12).

4/3 directional valve with spring centering of the pilot spool

With this version, main control spool (2) is held by two return springs (3.1) and (3.2) in the zero position. The two spring chambers (6) and (8) are connected via reconnection plate (11) to ports X and Y.

When main control spool (2) is pressurized to pilot pressure on one of the two front faces, it is pushed to the operated position. The connections within the valve are established as required.

When the pressurized spool is depressurized, the spring on the opposite side causes the spool to be returned to the zero or initial position.

Pilot oil supply (sections A – A and B – B),
see pages 12 and 13.

Function, section: Type 4WEH…H

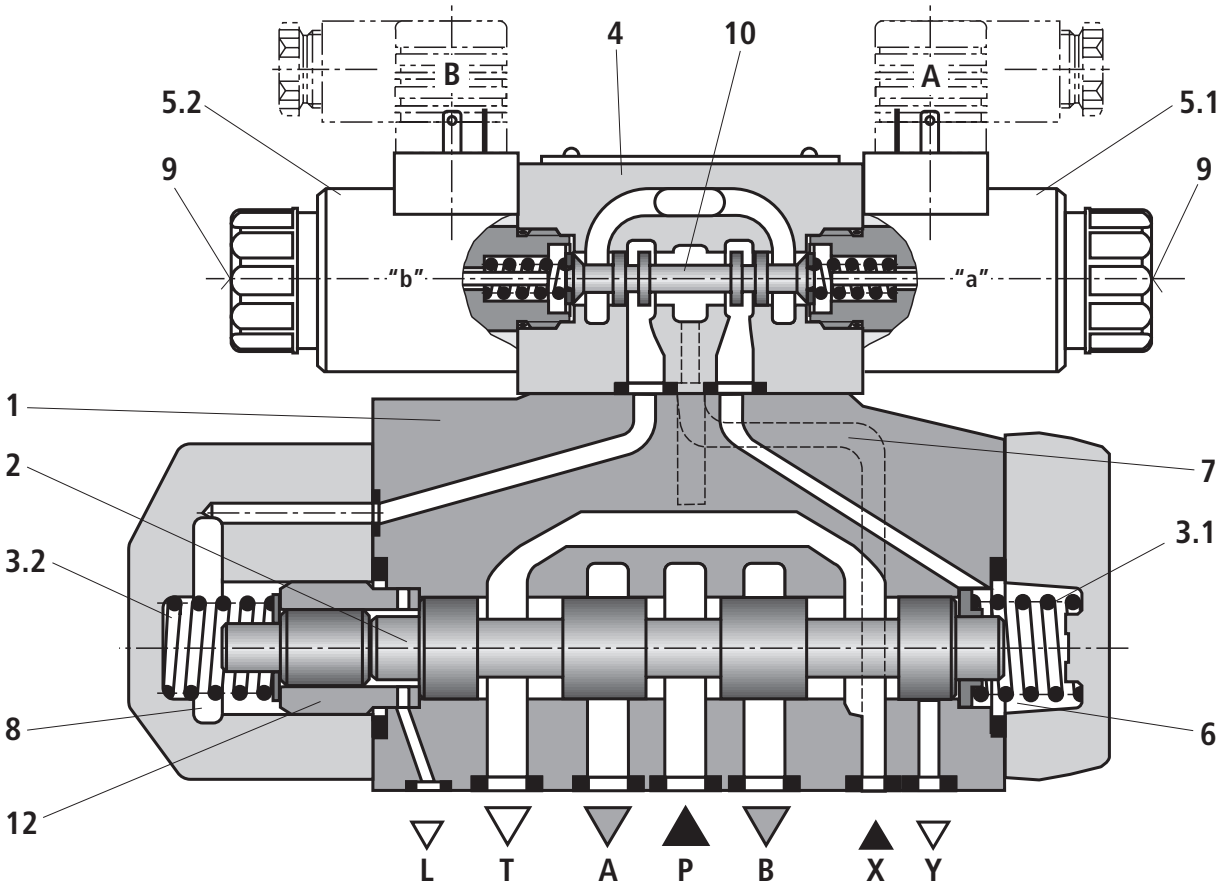

4/3 directional valves with pressure-centering of the main control spool, type 4WEH…H

Main control spool (2) in the main valve is held in the zero position through pressurization of the two spool faces. Centering bushing (12) is supported within the housing and holds the spool in position.

By depressurization of one spool face, main control spool (2) is brought to the operated position.

The unloaded spool area displaces the returning pilot oil via the pilot valve into channel Y (external).

☞ **Note!**

In this variant, springs (3.1) and (3.2) do not assume a return function. The hold the horizontally installed main control spool (2) in the central position when de-pressurized.

Pilot oil supply

NG10

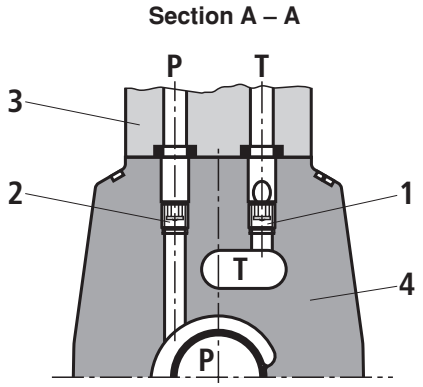

NG16

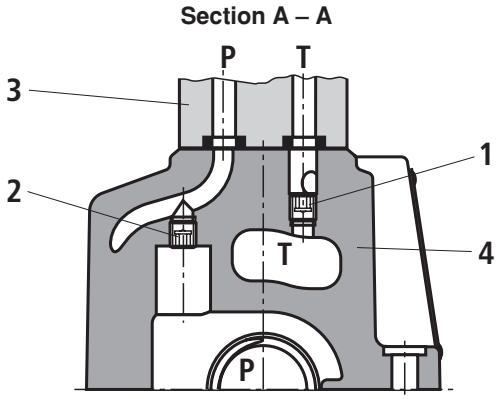

NG25 (type 4W.H **22** .7X/…)

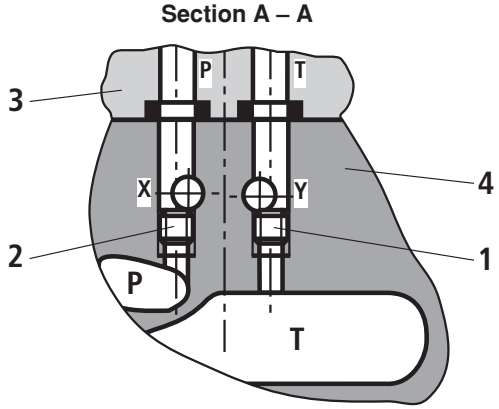

NG25 (type 4W.H **25** .6X/…)

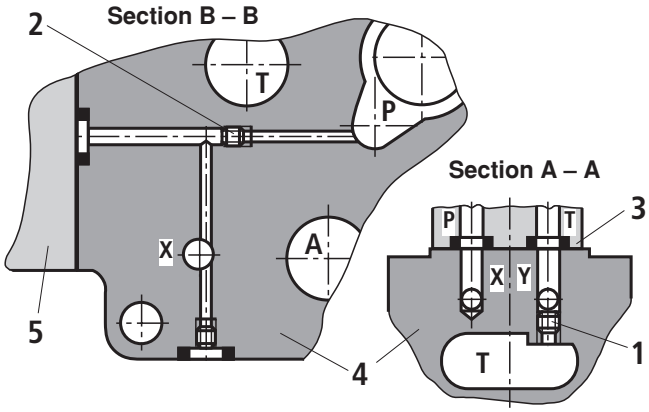

NG32

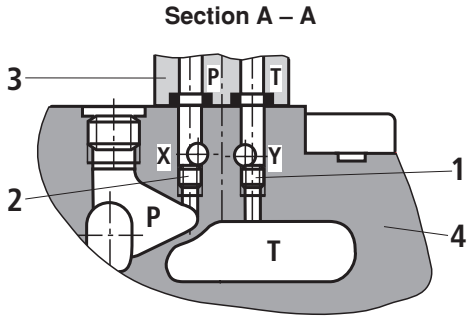

PIlot oil supply		**Pilot oil drain**	
External:	**2** closed	External:	**1** closed
internal:	**2** open	Internal:	**1** open

For further details and explanations of items, see next page.

Pilot oil supply

Type 4WH…

The pilot oil is supplied and drained **externally** via channels X and Y.

Type 4WEH…

The pilot oil is supplied **externally** - via channel X - from a separate pressure supply.

The pilot oil is drained **externally** - via channel Y - to the tank.

Type 4WEH…E…

The pilot oil is supplied **internally** from channel P of the main valve. (See page 15, footnotes [8] and [9])

The pilot oil is drained **externally** - via channel Y - to the tank. Port X in the subplate is plugged.

Type 4WEH…ET…

The pilot oil is supplied **internally** from channel P of the main valve.

The pilot oil is drained **internally** - via channel T - to the tank. Ports X and Y in the subplate are plugged.

Type 4WEH…T…

The pilot oil is supplied **externally** - via channel X - from a separate pressure supply.

The pilot oil is drained **internally** - via channel T - to the tank. Port Y in the subplate is plugged.

1 Plug screw M6, 3 A/F – pilot oil drain

2 Plug screw M6, 3 A/F – pilot oil supply

3 Pilot valve

4 Main valve

5 Cover

6 Throttle insert

Tightening torques M_T for cover mounting screws:

NG16: 35 Nm *[25.8 ft-lbs]*; **NG25**: 68 Nm *[50.2 ft-lbs]*

Tightening torques M_T for mounting screws of the pilot valve: **NG10 to 32**: 9 Nm *[6.6 ft-lbs]*

Throttle insert

The use of throttle insert (6) is required, if the pilot oil supply in channel P of the pilot valve is to be restricted (see below).

Throttle insert (6) is to be installed in channel P of the pilot valve.

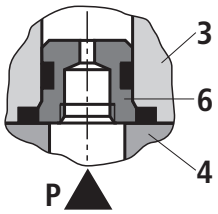

⚠ **Attention!**

The pilot oil supply may only be changed by authorized specialists or in the factory!

– **External** pilot oil supply X or drain Y:
  - For NG10, version SO30 must be provided for the use of sandwich plates. Code SO30 must be entered at the end of the type designation (sandwich plate).
  - Make sure that the permissible maximum parameters of the pilot valve are not exceeded (see RE 23178)!
  - Maximum pilot pressure: Please observe page 14!

– Internal pilot oil **supply** (versions “ET“ and “E“):
  - Minimum pilot pressure: Please observe page 15!
  - To avoid impermissibly high pressure peaks, a **throttle insert “B10“** must be provided in port P of the pilot valve (see above) .
  - In conjunction with version “H-“, **pressure reducing valve “D3“** must be provided additionally (see page 36).

Technical data (for applications outside these parameters, please consult us!)

General

Sizes		NG	**10**	**16**	**25** 4W.H **22**	**25** 4W.H **25**	**32**
Weight, ca.	– Valve with one solenoid	kg *[lbs]*	6.4 *[14.1]*	8.5 *[18.7]*	11.5 *[25.3]*	17.6 *[38.8]*	17.6 *[38.8]*
	– Valve with two solenoids, spring-centered	kg *[lbs]*	6.8 *[15.0]*	8.9 *[19.6]*	11.9 *[26.2]*	19.0 *[41.9]*	41.0 *[90.4]*
	– Valve with two solenoids, pressure-centered	kg *[lbs]*	6.8 *[15.0]*	8.9 *[19.6]*	11.9 *[26.2]*	19.0 *[41.9]*	41.0 *[90.4]*
	– Valve with hydraulic actuation (type 4WH…)	kg *[lbs]*	5.5 *[12.1]*	7.3 *[16.1]*	10.5 *[23.1]*	16.5 *[36.4]*	39.5 *[87.1]*
	– Switching time adjustment	kg *[lbs]*	0.8 *[1.8]*	0.8 *[1.8]*	0.8 *[1.8]*	0.8 *[1.8]*	0.8 *[1.8]*
	– Pressure reducing valve	kg *[lbs]*	0.4 *[0.9]*	0.4 *[0.9]*	0.4 *[0.9]*	0.4 *[0.9]*	0.4 *[0.9]*
Installation position			Optional; horizontal in the case of valves with hydraulic spool return “H“ and spool symbols A, B, C, D, K, Z, Y				
Ambient temperature range		°C *[°F]*	–30 to +50 *[–22 to +122]*				
Storage temperature range		°C *[°F]*	–20 to +70 *[–4 to +158]*				
Surface protection (valve body)			Paint-coating, layer thickness max. 100 µm				

Hydraulic

Maximum operating pressure								
– Ports P, A, B	Type 4WEH		bar *[psi]*	280 *[4061]*	280 *[4061]*	280 *[4061]*	280 *[4061]*	280 *[4061]*
	Type H-4WEH		bar *[psi]*	350 *[5076]*	350 *[5076]*	350 *[5076]*	350 *[5076]*	350 *[5076]*
– Port T	Pilot oil drain Y external	Type 4WEH	bar *[psi]*	280 *[4061]*	250 *[3626]*	250 *[3626]*	250 *[3626]*	250 *[3626]*
		Type H-4WEH		315 *[4568]*	250 *[3626]*	250 *[3626]*	250 *[3626]*	250 *[3626]*
	Pilot oil drain Y internal [1]		bar *[psi]*	210 *[3046]* with DC voltage; 160 *[2320]* with AC voltage				
– Port Y	External pilot oil drain		bar *[psi]*	210 *[3046]* with DC voltage; 160 *[2320]* with AC voltage				
	Type 4WH		bar *[psi]*	250 *[3626]*	250 *[3626]*	210 *[3046]*	250 *[3626]*	250 *[3626]*
	Type H-4WH		bar *[psi]*	315 *[4568]*	315 *[4568]*	270 *[3916]*	315 *[4568]*	315 *[4568]*
Hydraulic fluid [2]				Mineral oil (HL, HLP) to DIN 51524 [3]; fast bio-degradable hydraulic fluids to VDMA 24568 (see also RE 90221); HETG (rape seed oil) [3]; HEPG (polyglycols) [4]; HEES (synthetic esters) [4]; other hydraulic fluids on request				
Hydraulic fluid temperature range			°C *[°F]*	–30 to +80 *[–22 to +176]* (NBR seals) –20 to +80 *[–4 to +176]* (FKM seals)				
Viscosity range			mm^2/s *[SUS]*	2,8 to 500 *[35 to 2320]*				
Permissible max. degree of contamination of the hydraulic fluid - cleanliness class to ISO 4406 (c)				Class 20/18/15 [5]				
Maximum pilot pressure [6]			bar *[psi]*	250 *[3626]*	250 *[3626]*	210 *[3046]*	250 *[3626]*	250 *[3626]*

Technical data (for applications outside these parameters, please consult us!)

Hydraulic

Size		NG	10	16	25 4W.H 22	25 4W.H 25	32
Minimum pilot pressure (see also characteristic curves on page 17)							
– Pilot oil supply X external, pilot oil supply X internal (with spools: D, K, E, J, L, M, Q, R, U, W)							
3-position valve, spring-centered	Type H-4WEH…	bar *[psi]*	10 *[145]*	14 *[203]*	12,5 *[181]*	13 *[188]*	8,5 *[123]*
	Type 4WEH…	bar *[psi]*	10 *[145]*	14 *[203]*	10,5 *[152]*	13 *[188]*	8,5 *[123]*
3-position valve, pressure-centered		bar *[psi]*	–	14 *[203]*	–	18 *[261]*	8,5 *[123]*
2-position valve with spring end position	Type H-4WEH…	bar *[psi]*	10 *[145]*	14 *[203]*	14 *[203]*	13 *[188]*	10 *[145]*
	Type 4WEH…	bar *[psi]*	10 *[145]*	14 *[203]*	11 *[159]*	13 *[188]*	10 *[145]*
2-position valve with hydraulic end position		bar *[psi]*	7 *[101]*	14 *[203]*	8 *[116]*	8 *[116]*	5 *[72]*
– Pilot oil supply X internal (with spools C, F, G, H, P, T, V, Z, S [7])		bar *[psi]*	4.5 *[65]* [8]	4.5 *[65]* [9]	4.5 *[65]* [9]	4.5 *[65]* [9]	4.5 *[65]* [9]

[1] With 3-position valve, pressure-centering is only possible, if $p_{St} \geq 2 \times p_{Tank} + p_{St\,min}$.

[2] The ignition temperature of the process and operating medium used must be higher than the maximum solenoid surface temperature.

[3] Suitable for NBR **and** FKM seals

[4] Suitable **only** for FKM seals

[5] The cleanliness classes specified for components must be adhered to in hydraulic systems. Effective filtration prevents malfunction and, at the same time, prolongs the service life of components.

For the selection of filters, see data sheets RE 50070, RE 50076, RE 50081, RE 50086, RE 50087 and RE 50088.

[6] – Internal pilot oil **supply**:

- In the case of a higher pilot pressure, a pressure reducing valve “D3“ must be used.
- In conjunction with version “H-“, **pressure reducing valve “D3“** must be provided additionally. (If not used, pilot pressure = operating pressure in the port)

– External pilot oil **supply**:

- In conjunction with version “H-“, the adherence to the maximum pilot pressure must be ensured by taking suitable measures (e.g. installation of a pressure relief valve to protect the separate pilot oil circuit)!

[7] Spool S only for NG16

[8] With symbols C, F, G, H, P, T, V, Z, an internal pilot oil supply is only possible, if the flow from P to T in the central position (with 3-position valve) or while passing the central position (with 2-position valve) is so high that the pressure differential from P to T reaches a value of at least 6.5 bar *[94 psi]*.

[9] For spools C, F, G, J, H, P, T, V, Z, S [7] – by means of pre-load valve (not NG10) or correspondingly greater flow. (For the establishment of the required flow, see characteristic curves “Pre-load valve“ on page 37.)

Technical data (for applications outside these parameters, please consult us!)

Hydraulic

Size		NG	**10**	**16**	**25** 4W.H **22**	**25** 4W.H **25**	**32**
Pilot oil volume for switching process							
– 3-position valve, spring-centered		cm³ *[inch³]*	2.04 *[0.124]*	5.72 *[0.349]*	7.64 *[0.466]*	14.2 *[0.866]*	29.4 *[1.794]*
– 2-position valve		cm³ *[inch³]*	4.08 *[0.249]*	11.45 *[0.699]*	15.28 *[0.932]*	28.4 *[1.733]*	58.8 *[3.588]*
– 3-position valve, pressure-centered							
from zero position to spool position “a“	Type WH	cm³ *[inch³]*	–	2.83 *[0.173]*	–	7.15 *[0.436]*	14.4 *[0.879]*
	Type WEH	cm³ *[inch³]*	–	2.83 *[0.173]*	–	7.15 *[0.436]*	14.4 *[0.879]*
from spool position “a“ to zero position	Type WH	cm³ *[inch³]*	–	5.72 *[0.349]*	–	14.18 *[0.865]*	29.4 *[1.794]*
	Type WEH	cm³ *[inch³]*	–	2.9 *[0.177]*	–	7.0 *[0.427]*	15.1 *[0.921]*
from zero position to spool position “b“	Type WH	cm³ *[inch³]*	–	5.72 *[0.349]*	–	14.18 *[0.865]*	29.4 *[1.794]*
	Type WEH	cm³ *[inch³]*	–	5.72 *[0.349]*	–	14.15 *[0.863]*	29.4 *[1.794]*
from spool position “b“ to zero position	Type WH	cm³ *[inch³]*	–	8.55 *[0.522]*	–	19.88 *[1.213]*	43.8 *[2.673]*
	Type WEH	cm³ *[inch³]*	–	2.83 *[0.173]*	–	5.73 *[0.349]*	14.4 *[0.879]*
Pilot oil flow for shortest switching time, ca.		l/min *[US gpm]*	35 *[9.2]*	35 *[9.2]*	35 *[9.2]*	35 *[9.2]*	45 *[11.9]*

Switching times (= closing of contact on the pilot valve until the control land starts to open in the main valve and change of spool stroke by 95%)

Pilot pressure		bar *[psi]*	70 *[1015]*	210 *[3046]*	250 *[3626]*	Spring
			ON			OFF
NG10	– Without throttle insert	ms	40 to 60	–	40 to 60	20 to 30
	– With throttle insert	ms	60 to 90	–	50 to 70	20 to 30
NG16	– Without throttle insert	ms	50 to 80	–	40 to 60	50 to 80
	– With throttle insert	ms	110 to 130	–	80 to 100	50 to 80
NG25 (4W.H **22**)	– Without throttle insert	ms	40 to 70	40 to 60	–	50 to 70
	– With throttle insert	ms	140 to 160	80 to 110	–	50 to 70
NG25 (4W.H **25**)	– Without throttle insert	ms	70 to 100	–	50 to 70	100 to 130
	– With throttle insert	ms	200 to 250	–	120 to 150	100 to 130
NG32	– Without throttle insert	ms	80 to 130	–	70 to 100	140 to 160
	– With throttle insert	ms	420 to 560	–	230 to 350	140 to 160

☞ **Notes!**

- The switching times are measured in accordance with ISO 6403 with HLP46, ϑ_{oil} = 40 °C ±5 °C *[104 °F ±9 °F]*. At different oil temperatures, deviations are possible!
- The switching times were established using DC voltage solenoids. They are reduced by ca. 20 ms when AC voltage solenoids are used.
- The de-energization of the solenoid generates voltage peaks, which can be prevented by installing suitable diodes.
- When pressure reducing valve “D3“ is used, the switching times increase by ca. 30 ms.
- The switching times were established under ideal conditions and can deviate within the system depending on the operating conditions.

Free flow cross-sections in zero position with spools Q, V and W

Size		NG	**10**	**16**	**25** 4W.H **22**	**25** 4W.H **25**	**32**
Spool **Q**	A – T; B – T	mm² *[inch²]*	13 *[0.02]*	32 *[0.05]*	78 *[0.121]*	83 *[0.129]*	78 *[0.121]*
Spool **V**	P – A; P – B	mm² *[inch²]*	13 *[0.02]*	32 *[0.05]*	73 *[0.113]*	83 *[0.129]*	73 *[0.113]*
	A – T; B – T	mm² *[inch²]*	13 *[0.02]*	32 *[0.05]*	84 *[0.13]*	83 *[0.129]*	84 *[0.13]*
Spool **W**	A – T; B – T	mm² *[inch²]*	2,4 *[0.004]*	6 *[0.009]*	10 *[0.015]*	14 *[0.022]*	20 *[0.031]*

Characteristic curves (measured with HLP46, ϑ_{oil} = 40 °C ±5 °C *[104 °F ±9 °F]*)

Minimum pilot pressure in dependence on tank pressure

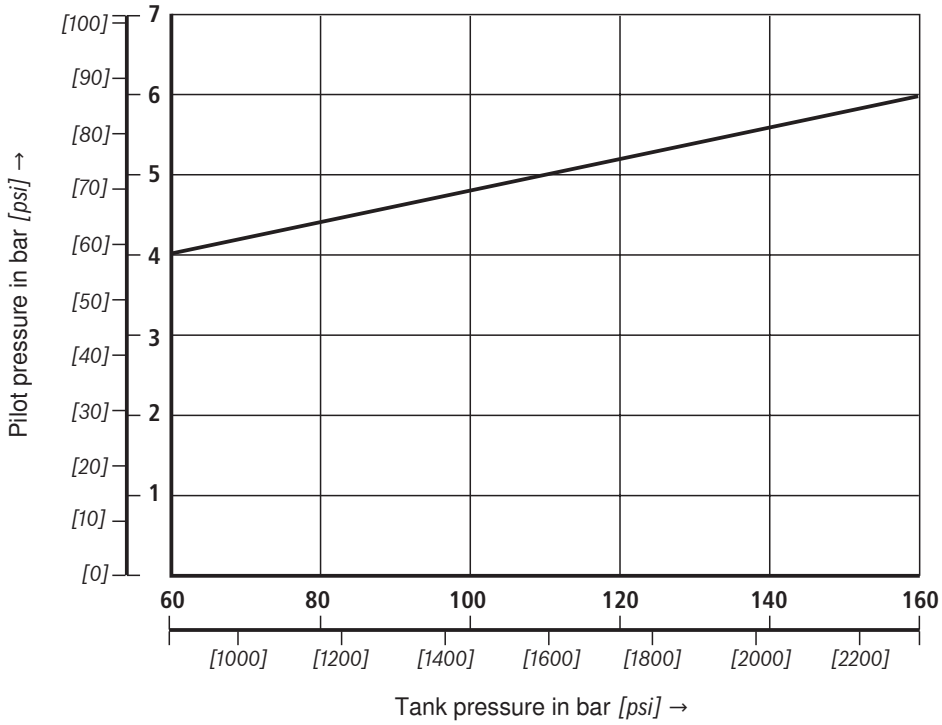

At a higher tank pressure the minimum pilot pressure must be raised in accordance with this diagram.

Characteristic curves: NG10 (measured with HLP46, ϑ_{oil} = 40 °C ±5 °C *[104 °F ±9 °F]*)

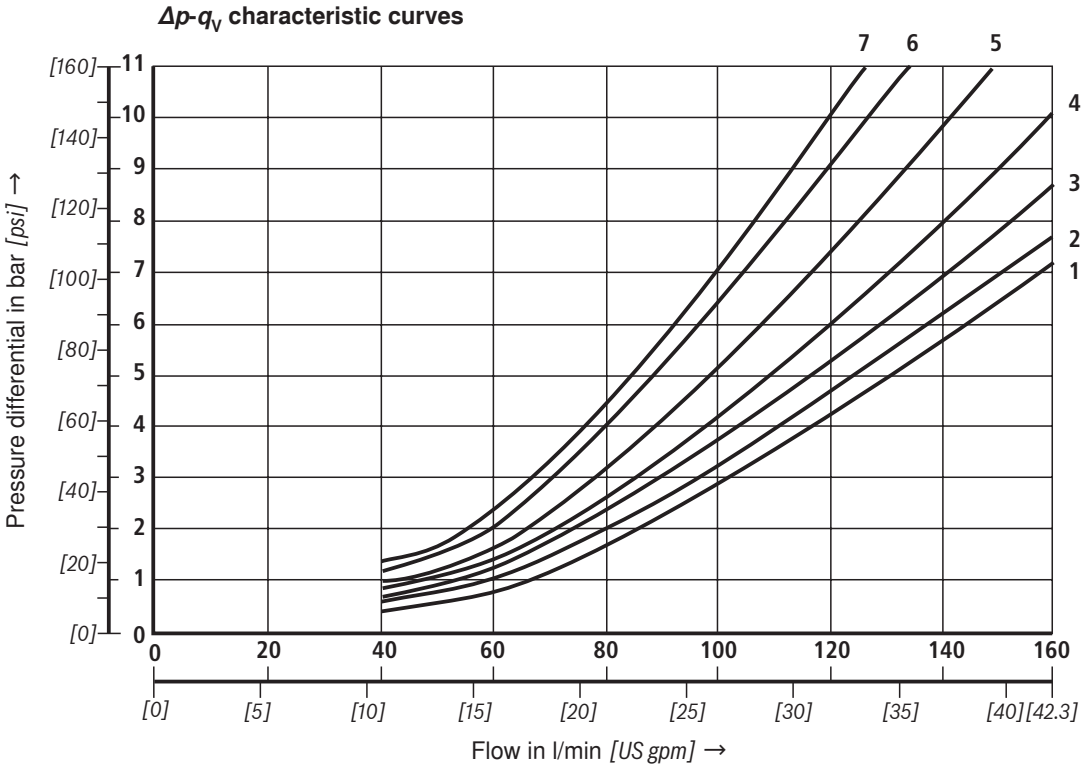

Spool	Spool position				Spool	Zero position		
	P – A	P – B	A – T	B – T		A – T	B – T	P – T
E, Y, D	2	2	4	5				
F	1	4	1	4	**F**	3	–	6
G, T	4	2	2	6	**G, T**	–	–	7
H, C	4	4	1	4	**H**	1	3	5
J, K	1	2	1	3				
L	2	3	1	4	**L**	3	–	–
M	4	4	3	4				
P	4	1	3	4	**P**	–	7	5
Q, V, W, Z	2	2	3	5				
R	2	2	3	–				
U	3	3	3	4	**U**	–	4	–
A, B	2	2	–	–				

Performance limits: NG10 (measured with HLP46, ϑ_{oil} = 40 °C ±5 °C *[104 °F ±9 °F]*)

2-position valves – $q_{V\,max}$ in l/min *[US gpm]*

Spool	Operating pressure p_{max} in bar *[psi]*		
	200 *[2900]*	**250** *[3626]*	**315** *[4568]*
E, J, L, M, Q, R, U, V, W, C, D, K, Z, Y	160 *[42]*	160 *[42]*	160 *[42]*
H	160 *[42]*	150 *[39]*	120 *[32]*
G, T	160 *[42]*	160 *[42]*	140 *[37]*
F, P	160 *[42]*	140 *[37]*	120 *[32]*

⚠ **Attention!**
Important notes - see page 26!

Characteristic curves: NG16 (measured with HLP46, ϑ_{oil} = 40 °C ±5 °C *[104 °F ±9 °F]*)

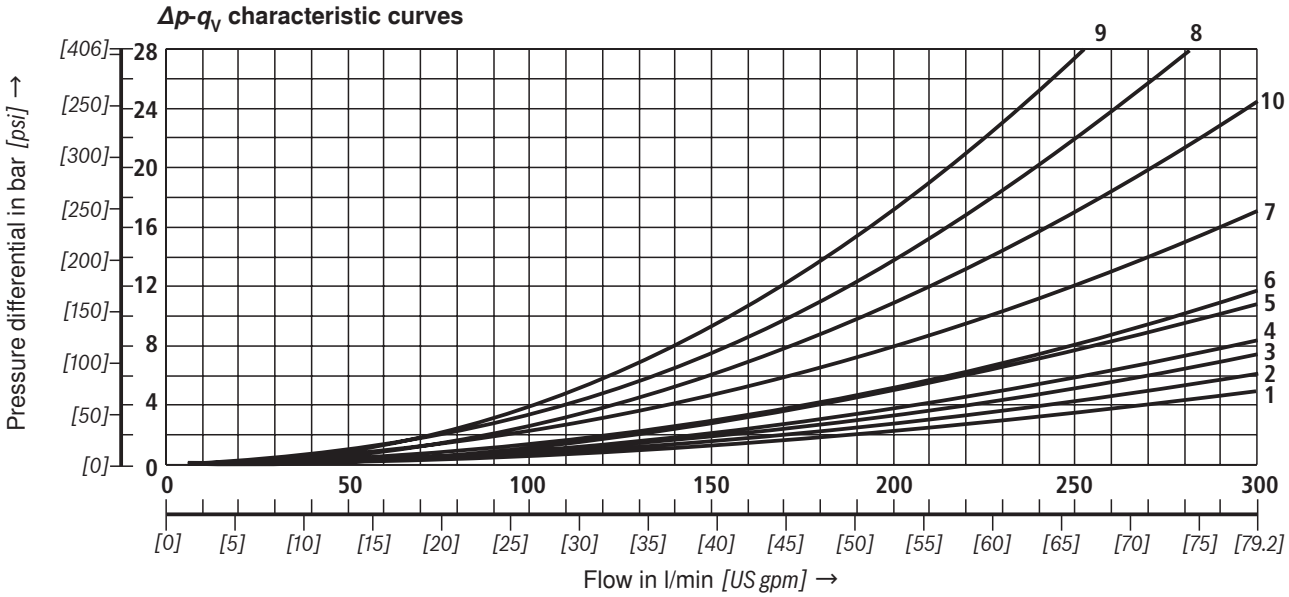

Spool	Spool position				Zero position		
	P – A	P – B	A – T	B – T	P – T	A – T	B – T
D, E	1	1	3	3			
F	1	2	5	5	4	3	–
G	4	1	5	5	7	–	–
C, H	1	1	5	6	2	4	4
K, J	2	2	6	6	–	3	–
L	2	2	5	4	–	3	–
M	1	1	3	4			
P	2	1	3	6	5	–	–

Spool	Spool position				Zero position		
	P – A	P – B	A – T	B – T	P – T	A – T	B – T
Q	1	1	6	6			
R	2	4	7	–			
S	3	3	3	–	9	–	–
T	4	1	5	5	7	–	–
U	2	2	3	6			
V, Z	1	1	6	6	10	8	8
W	1	1	3	4			

Performance limits: NG16 (measured with HLP46, ϑ_{oil} = 40 °C ±5 °C *[104 °F ±9 °F]*)

2-position valves – $q_{V\,max}$ in l/min *[US gpm]*

Spool	Operating pressure p_{max} in bar *[psi]*				
	70 *[1015]*	**140** *[2030]*	**210** *[3046]*	**280** *[4061]*	**350** *[5076]*
X external – spring end position in main valve (at $p_{St\,min}$ = 12 bar *[174 psi]*)					
C, D, K, Y, Z	300 *[79]*	300 *[79]*	300 *[79]*	300 *[79]*	300 *[79]*
X external – spring end position in main valve [1]					
C	300 *[79]*	300 *[79]*	300 *[79]*	300 *[79]*	300 *[79]*
D, Y	300 *[79]*	270 *[71]*	260 *[68]*	250 *[66]*	230 *[60]*
K	300 *[79]*	250 *[66]*	240 *[63]*	230 *[60]*	210 *[55]*
Z	300 *[79]*	260 *[68]*	190 *[50]*	180 *[47]*	160 *[42]*
X external – hydraulic end position in main valve					
HC, HD, HK, HZ, HY	300 *[79]*	300 *[79]*	300 *[79]*	300 *[79]*	300 *[79]*

⚠ Attention!

[1] When the specified flow values are exceeded, the function of the return springs can no longer be guaranteed in the event of a pilot pressure failure!

3-position valves – $q_{V\,max}$ in l/min *[US gpm]*

Spool	Operating pressure p_{max} in bar *[psi]*				
	70 *[1015]*	**140** *[2030]*	**210** *[3046]*	**280** *[4061]*	**350** *[5076]*
X external – spring-centered					
E, H, J, L, M, Q, U, W, R	300 *[79]*	300 *[79]*	300 *[79]*	300 *[79]*	300 *[79]*
F, P	300 *[79]*	250 *[66]*	180 *[47]*	170 *[45]*	150 *[39]*
G, T	300 *[79]*	300 *[79]*	240 *[63]*	210 *[55]*	190 *[50]*
S	300 *[79]*	300 *[79]*	300 *[79]*	250 *[66]*	220 *[58]*
V	300 *[79]*	250 *[66]*	210 *[55]*	200 *[53]*	180 *[47]*
X external – pressure-centered (at minimum pilot pressure of 16 bar *[232 psi]*)					
All spools [2]	300 *[79]*	300 *[79]*	300 *[79]*	300 *[79]*	300 *[79]*

[2] With spool V , the pilot valve is not required in the case of flows > 160 l/min *[42 US gpm]*.

For further important notes, see page 26!

Characteristic curves: NG25 (type W.H **22**)
(measured with HLP46, ϑ_{oil} = 40 °C ±5 °C *[104 °F ±9 °F]*)

***Δp-q*$_V$ characteristic curves**

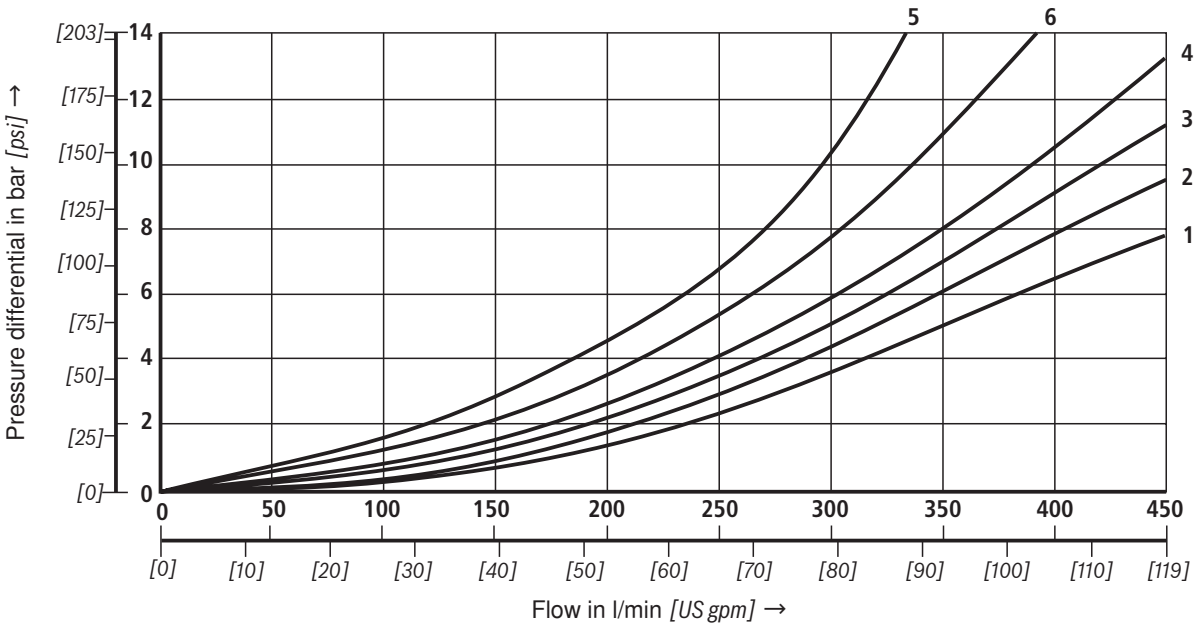

Spool	Spool position				
	P – A	P – B	A – T	B – T	B – A
E, M, P, Q, U, V, Z, C	2	2	1	4	–
F	1	2	1	2	–
G, T	2	2	2	4	–
H, J, W, K, D	2	2	1	3	–
L	2	2	1	2	–
R	1	2	1	–	5
A, B	2	2	–	–	–

Spool	Zero position		
	A – T	B – T	P – T
F	–	–	4
G, P	–	–	6
H	–	–	2
L	4	–	–
T	–	–	5
U	–	6	–

Performance limits: NG25 (type W.H **22**)
(measured with HLP46, ϑ_{oil} = 40 °C ±5 °C *[104 °F ±9 °F]*)

2-position valves – $q_{V\,max}$ in l/min *[US gpm]*

Spool	Operating pressure p_{max} in bar *[psi]*				
	70 *[1015]*	**140** *[2030]*	**210** *[3046]*	**280** *[4061]*	**350** *[5076]*
X external – spring end position in main valve (at $p_{St\,min}$ = 11 bar / 14 bar *[159 / 203 psi]*)					
C, D, K, Y, Z	450 *[119]*	450 *[119]*	450 *[119]*	450 *[119]*	450 *[119]*
X external – spring end position in main valve [1)]					
C	450 *[119]*	450 *[119]*	320 *[84]*	250 *[66]*	200 *[53]*
D, Y	450 *[119]*	450 *[119]*	450 *[119]*	400 *[105]*	320 *[84]*
K	450 *[119]*	215 *[57]*	150 *[39]*	120 *[32]*	100 *[26]*
Z	350 *[92]*	300 *[79]*	290 *[76]*	260 *[68]*	160 *[42]*
X external – hydraulic end position in main valve					
HC, HD, HK, HZ, HY	450 *[119]*	450 *[119]*	450 *[119]*	450 *[119]*	450 *[119]*
HC./O…, HD./O…, HK./O…, HZ./O…	450 *[119]*	450 *[119]*	450 *[119]*	450 *[119]*	450 *[119]*
HC./OF…, HD./OF…, HK./OF…, HZ./OF…	450 *[119]*	450 *[119]*	450 *[119]*	450 *[119]*	450 *[119]*

3-position valves – $q_{V\,max}$ in l/min *[US gpm]*

Spool	Operating pressure p_{max} in bar *[psi]*				
	70 *[1015]*	**140** *[2030]*	**210** *[3046]*	**280** *[4061]*	**350** *[5076]*
X external – spring-centered					
E, J, L, M, Q, U, W, R	450 *[119]*	450 *[119]*	450 *[119]*	450 *[119]*	450 *[119]*
H	450 *[119]*	450 *[119]*	300 *[79]*	260 *[68]*	230 *[61]*
G	400 *[105]*	350 *[92]*	250 *[66]*	200 *[53]*	180 *[47]*
F	450 *[119]*	270 *[71]*	175 *[46]*	130 *[34]*	110 *[29]*
V	450 *[119]*	300 *[79]*	240 *[63]*	220 *[58]*	160 *[42]*
T	400 *[105]*	300 *[79]*	240 *[63]*	200 *[53]*	160 *[42]*
P	450 *[119]*	270 *[71]*	180 *[47]*	170 *[45]*	110 *[29]*

⚠ **Attention!**

1) When the specified flow values are exceeded, the function of the return springs can no longer be guaranteed in the event of a pilot pressure failure!

For further important notes, see page 26!

Characteristic curves: NG25 (type W.H **25**)
(measured with HLP46, ϑ_{oil} = 40 °C ±5 °C *[104 °F ±9 °F]*)

***Δp-q*$_V$ characteristic curves**

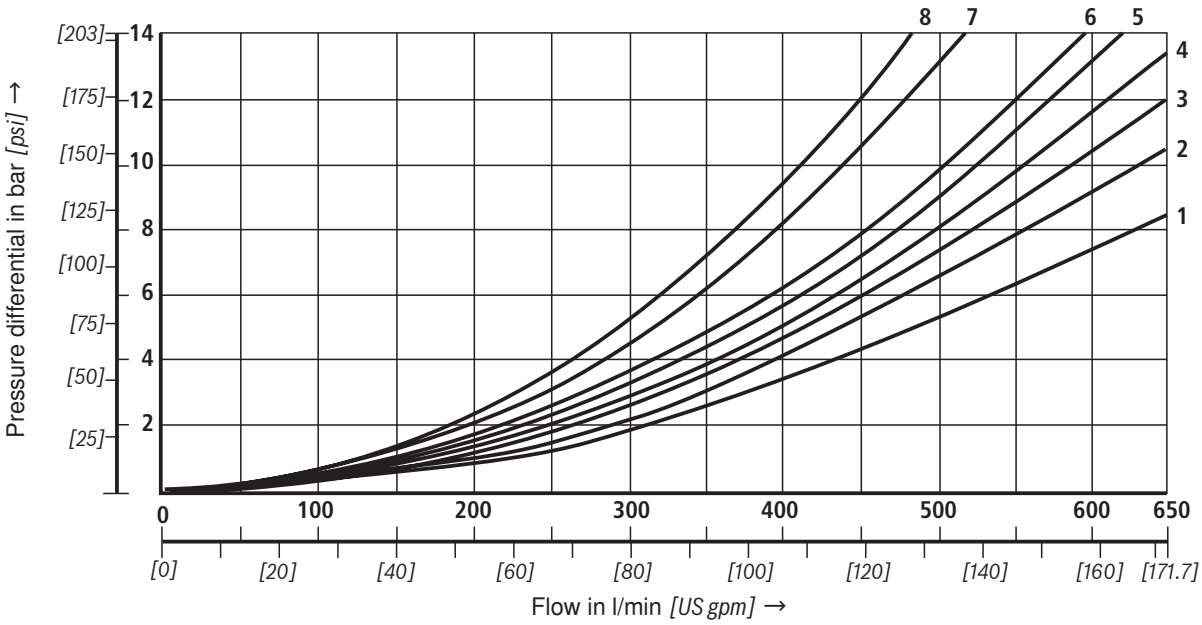

Spool	Spool position			
	P – A	P – B	A – T	B – T
E, C	1	1	1	3
F	1	4	3	3
G	3	1	2	4
H, D	4	4	3	4
J, Q, K	2	2	3	5
L	2	2	3	3
M	4	4	1	4

Spool	Spool position				
	P – A	P – B	A – T	B – T	B – A
P	4	1	1	5	–
R	2	1	1	–	8
U	4	1	1	6	–
V, Z	2	4	3	6	–
W	1	1	1	3	–
T	3	1	2	4	–

7 Spool G, central position P – T

8 Spool T, central position P – T

Performance limits: NG25 (type W.H **25**)
(measured with HLP46, ϑ_{oil} = 40 °C ±5 °C *[104 °F ±9 °F]*)

2-position valves – $q_{V\,max}$ in l/min *[US gpm]*

Spool	Operating pressure p_{max} in bar *[psi]*				
	70 *[1015]*	**140** *[2030]*	**210** *[3046]*	**280** *[4061]*	**350** *[5076]*
X external – spring end position in main valve (at $p_{St\,min}$ = 13 bar *[188 psi]*)					
C, D, K, Y, Z	700 *[185]*	700 *[185]*	700 *[185]*	700 *[185]*	650 *[172]*
X external – spring end position in main valve [1)]					
C	700 *[185]*	700 *[185]*	700 *[185]*	700 *[185]*	650 *[172]*
D, Y	700 *[185]*	650 *[172]*	400 *[105]*	350 *[92]*	300 *[79]*
K	700 *[185]*	650 *[172]*	420 *[111]*	370 *[98]*	320 *[84]*
Z	700 *[185]*	700 *[185]*	650 *[172]*	480 *[127]*	400 *[105]*
X external – hydraulic end position in main valve					
HC, HD, HK, HZ, HY	700 *[185]*	700 *[185]*	700 *[185]*	700 *[185]*	700 *[185]*
HC./O…, HD./O…, HK./O…, HZ./O…	700 *[185]*	700 *[185]*	700 *[185]*	700 *[185]*	700 *[185]*
HC./OF…, HD./OF…, HK./OF…, HZ./OF…	700 *[185]*	700 *[185]*	700 *[185]*	700 *[185]*	700 *[185]*

⚠ **Attention!**

1) When the specified flow values are exceeded, the function of the return springs can no longer be guaranteed in the event of a pilot pressure failure!

For further important notes, see page 26!

3-position valves – $q_{V\,max}$ in l/min *[US gpm]*

Spool	Operating pressure p_{max} in bar *[psi]*				
	70 *[1015]*	**140** *[2030]*	**210** *[3046]*	**280** *[4061]*	**350** *[5076]*
X external – spring-centered					
E, L, M, Q, U, W	700 *[185]*	700 *[185]*	700 *[185]*	700 *[185]*	650 *[172]*
G, T	400 *[105]*	400 *[105]*	400 *[105]*	400 *[105]*	400 *[105]*
F	650 *[172]*	550 *[145]*	430 *[113]*	330 *[87]*	300 *[79]*
H	700 *[185]*	650 *[172]*	550 *[145]*	400 *[105]*	360 *[95]*
J	700 *[185]*	700 *[185]*	650 *[172]*	600 *[158]*	520 *[137]*
P	650 *[172]*	550 *[145]*	430 *[113]*	330 *[87]*	300 *[79]*
V	650 *[172]*	550 *[145]*	400 *[105]*	350 *[92]*	310 *[82]*
R	700 *[185]*	700 *[185]*	700 *[185]*	650 *[172]*	580 *[153]*
X external – pressure-centered (at minimum pilot pressure of 18 bar *[261 psi]*)					
E, F, H, J, L, M, P, Q, R, U, V, W	700 *[185]*	700 *[185]*	700 *[185]*	700 *[185]*	650 *[172]*
G, T	400 *[105]*	400 *[105]*	400 *[105]*	400 *[105]*	400 *[105]*
X external – pressure-centered (at pilot pressure > 30 bar *[435 psi]*)					
G, T	700 *[185]*	700 *[185]*	700 *[185]*	700 *[185]*	650 *[172]*

Characteristic curves: NG32 (measured with HLP46, ϑ_{oil} = 40 °C ±5 °C *[104 °F ±9 °F]*)

***Δp-q*$_V$ characteristic curves** – spools **E**, **R** and **W**

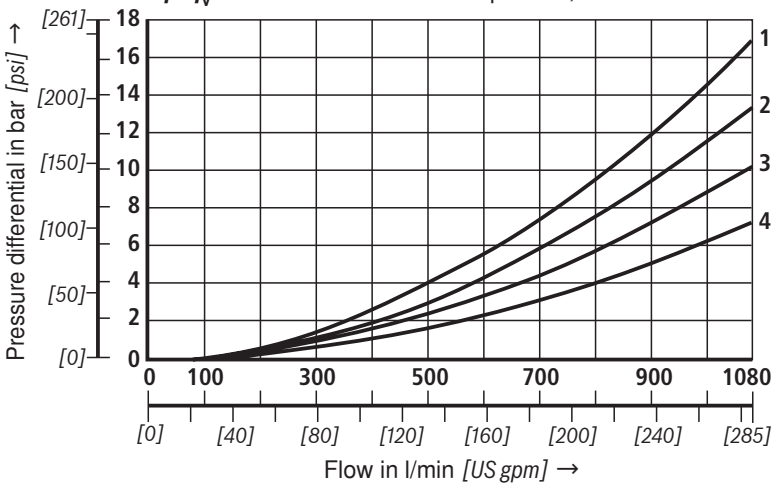

Spool	Spool position				
	P – A	P – B	A – T	B – T	B – A
E	4	4	3	2	–
R	4	4	3	–	1
W	4	4	3	2	–

***Δp-q*$_V$ characteristic curves** – spools **G** and **T**

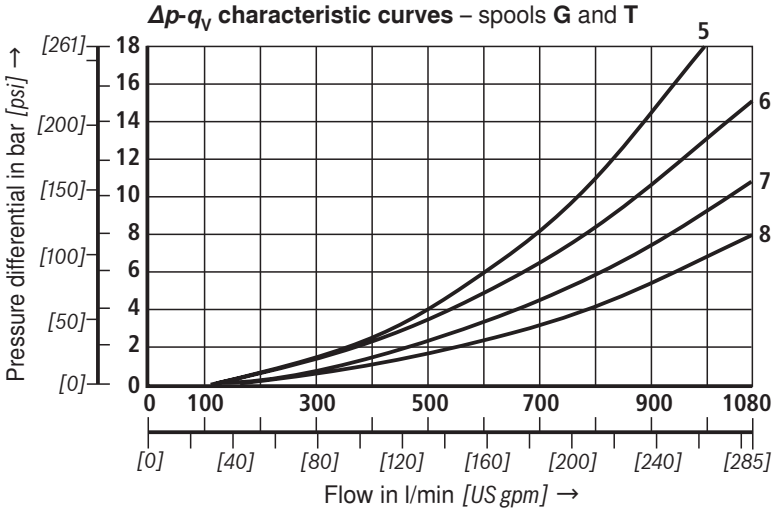

Spool	Spool position				
	P – A	P – B	A – T	B – T	P – T
G	7	8	7	5	6
T	7	8	7	5	6

Performance limits: NG32 (measured with HLP46, ϑ_{oil} = 40 °C ±5 °C *[104 °F ±9 °F]*)

2-position valves – $q_{V\,max}$ in l/min *[US gpm]*

Spool	Operating pressure p_{max} in bar *[psi]*				
	70 *[1015]*	**140** *[2030]*	**210** *[3046]*	**280** *[4061]*	**350** *[5076]*
X external – spring end position in main valve (at $p_{St\,min}$ = 10 bar *[145 psi]*)					
C, D, K, Y, Z	1100 *[290]*	1040 *[275]*	860 *[227]*	750 *[198]*	680 *[179]*
X external – spring end position in main valve [1)]					
C	1100 *[290]*	1040 *[275]*	860 *[227]*	800 *[211]*	700 *[185]*
D, Y	1100 *[290]*	1040 *[275]*	540 *[142]*	480 *[127]*	420 *[111]*
K	1100 *[290]*	1040 *[275]*	860 *[227]*	500 *[132]*	450 *[119]*
Z	1100 *[290]*	1040 *[275]*	860 *[227]*	700 *[185]*	650 *[172]*
X external – hydraulic end position in main valve					
HC, HD, HK, HZ, HY	1100 *[290]*	1040 *[275]*	860 *[227]*	750 *[198]*	680 *[179]*

3-position valves – $q_{V\,max}$ in l/min *[US gpm]*

Spool	Operating pressure p_{max} in bar *[psi]*				
	70 *[1015]*	**140** *[2030]*	**210** *[3046]*	**280** *[4061]*	**350** *[5076]*
X external – spring-centered					
E, J, L, M, Q, R, U, W	1100 *[290]*	1040 *[275]*	860 *[227]*	750 *[198]*	680 *[179]*
G, T, H, F, P	900 *[238]*	900 *[238]*	800 *[211]*	650 *[172]*	450 *[119]*
V	1100 *[290]*	1000 *[264]*	680 *[179]*	500 *[132]*	450 *[119]*
X external – pressure-centered (at minimum pilot pressure 8,5 bar *[123 psi]*)					
All spools	1100 *[290]*	1040 *[275]*	860 *[227]*	750 *[198]*	680 *[179]*

⚠ **Attention!**

1) When the specified flow values are exceeded, the function of the return springs can no longer be guaranteed in the event of a pilot pressure failure!

For further important notes, see page 26!

Performance limits: Important notes

General:

⚠ Attention!

The specified switching performance limits are valid for operation with two directions of flow (e.g. from P to A and simultaneous return flow from B to T in the ratio of 1:1).

Due to the flow forces acting within the valve, the permissible switching performance limits may be considerably lower with only one direction of flow (e.g. from P to A while port B is blocked with flow in only one direction or different flows)!

In the case of such applications, please consult us!

The switching performance limit was established when the solenoids were at operating temperature, at 10% undervoltage and without tank pre-loading.

⚠ Attention!

NG16	– With **X internal** pilot oil supply, a pre-load valve must be used at flows < 160 l/min *[42 US gpm]* due to the negative overlap of spools C, Z and HC, HZ. – When 4/3 directional valves with pressure-centered control spool in the main valve are used beyond the specified performance limit, a higher pilot pressure is required. At, for example, an operating pressure of p_{max} = 350 bar *[5076 psi]* and a flow of q_V = 300 l/min *[79 US gpm]* a pilot pressure of 16 bar *[232 psi]* is required. The maximum flow for these valves therefore depends on the Δp value, which is acceptable for the system. – With **X internal** pilot oil supply, a pre-load valve must generally be used (see page 37) due to the negative overlap of spools F, G, H, J, P, S, and T.
NG25	– With **X internal** pilot oil supply, a pre-load valve must be used at flows < 180 l/min *[47.5 US gpm]* due to the negative overlap of spools Z, HZ, and V. – With **X internal** pilot oil supply, a pre-load valve must generally be used due to the negative overlap of spools C, HC, F, G, H, P, and T.
NG32	– With **X internal** pilot oil supply, a pre-load valve must be used at flows < 180 l/min *[47.5 US gpm]* due to the negative overlap of spools Z, HZ, and V. – When 4/3 directional valves with pressure-centered control spool in the main valve are used beyond the specified performance limit, a higher pilot pressure is required. At, for example, an operating pressure of p_{max} = 350 bar *[5076 psi]* and a flow of q_V = 1100 l/min *[290 US gpm]* a pilot pressure of 15 bar *[217 psi]* is required. The maximum flow for these valves therefore depends on the Δp value, which is acceptable for the system. – With **X internal** pilot oil supply, a pre-load valve must generally be used due to the negative overlap of spools C, HC, F, G, H, P and T.

Unit dimensions: NG10 (dimensions in mm *[inch]*)

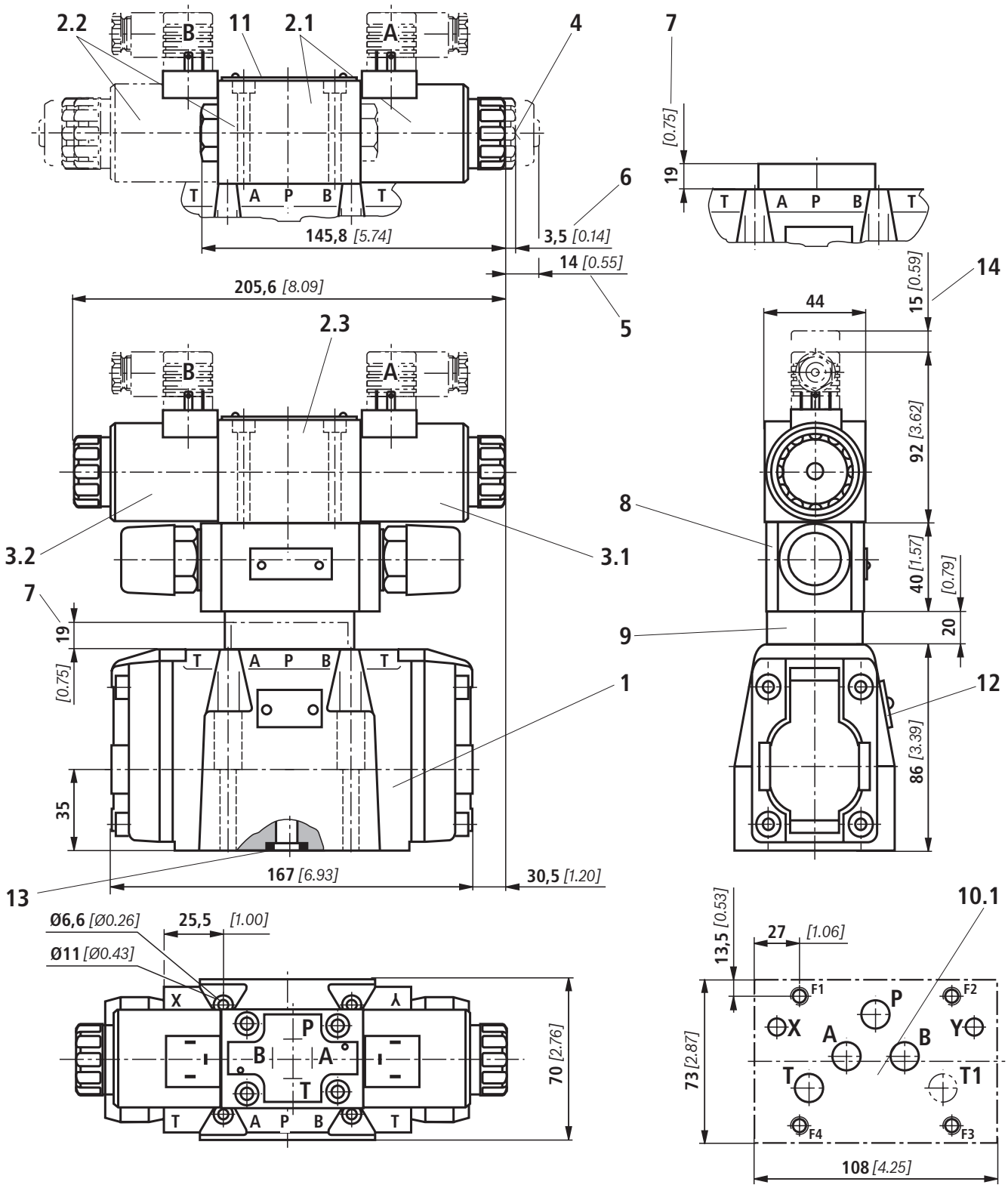

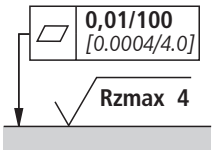

Required surface quality
of the valve mounting face

For the explanation of items and subplates, see page 32.
For valve mounting screws, see page 33.

Unit dimensions: NG16 (dimensions in mm *[inch]*)

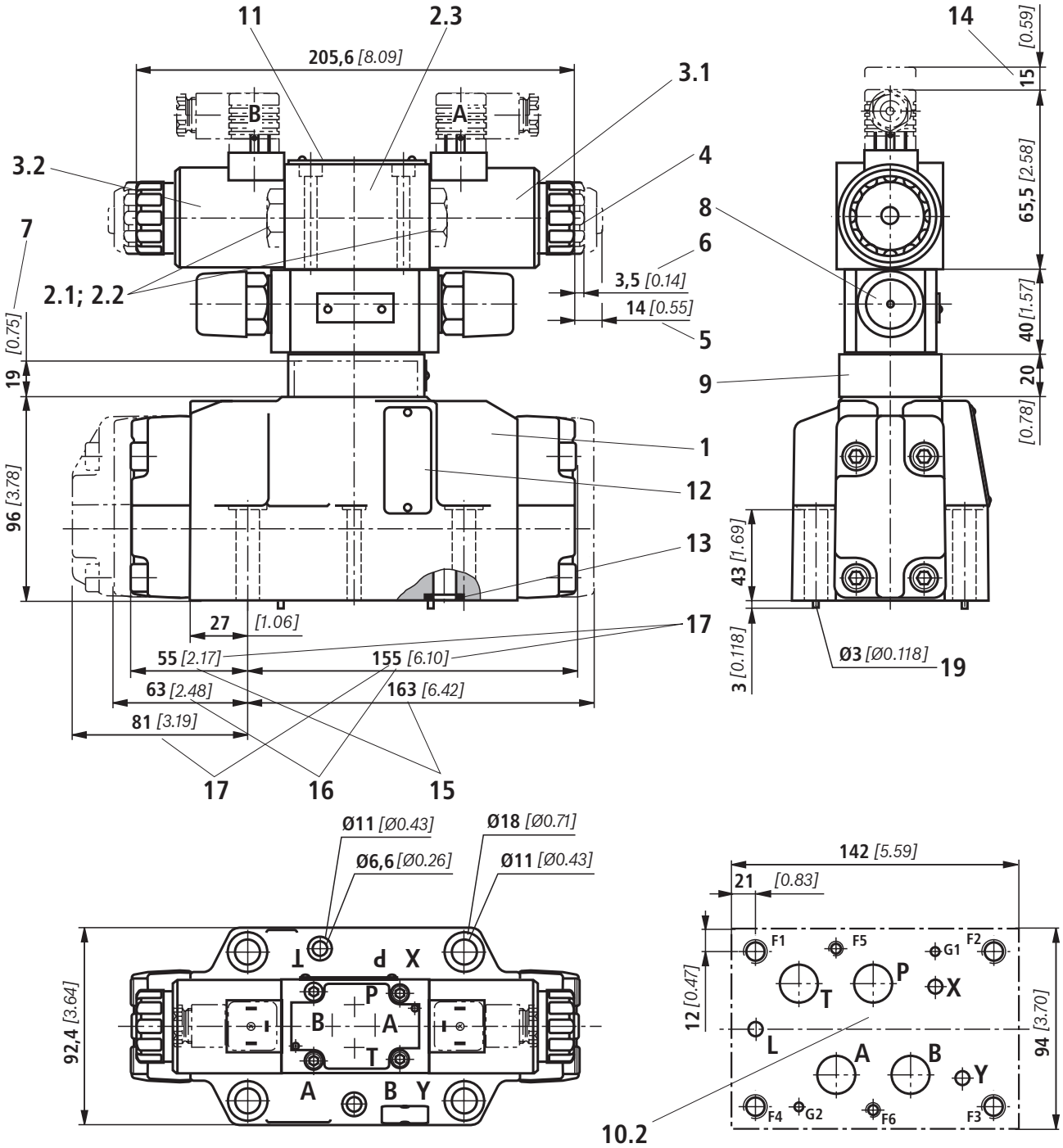

For the explanation of items and subplates, see page 32.
For valve mounting screws, see page 33.

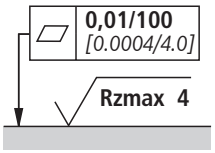

Required surface quality
of the valve mounting face

Unit dimensions: NG25 (type W.H **22**) (dimensions in mm *[inch]*)

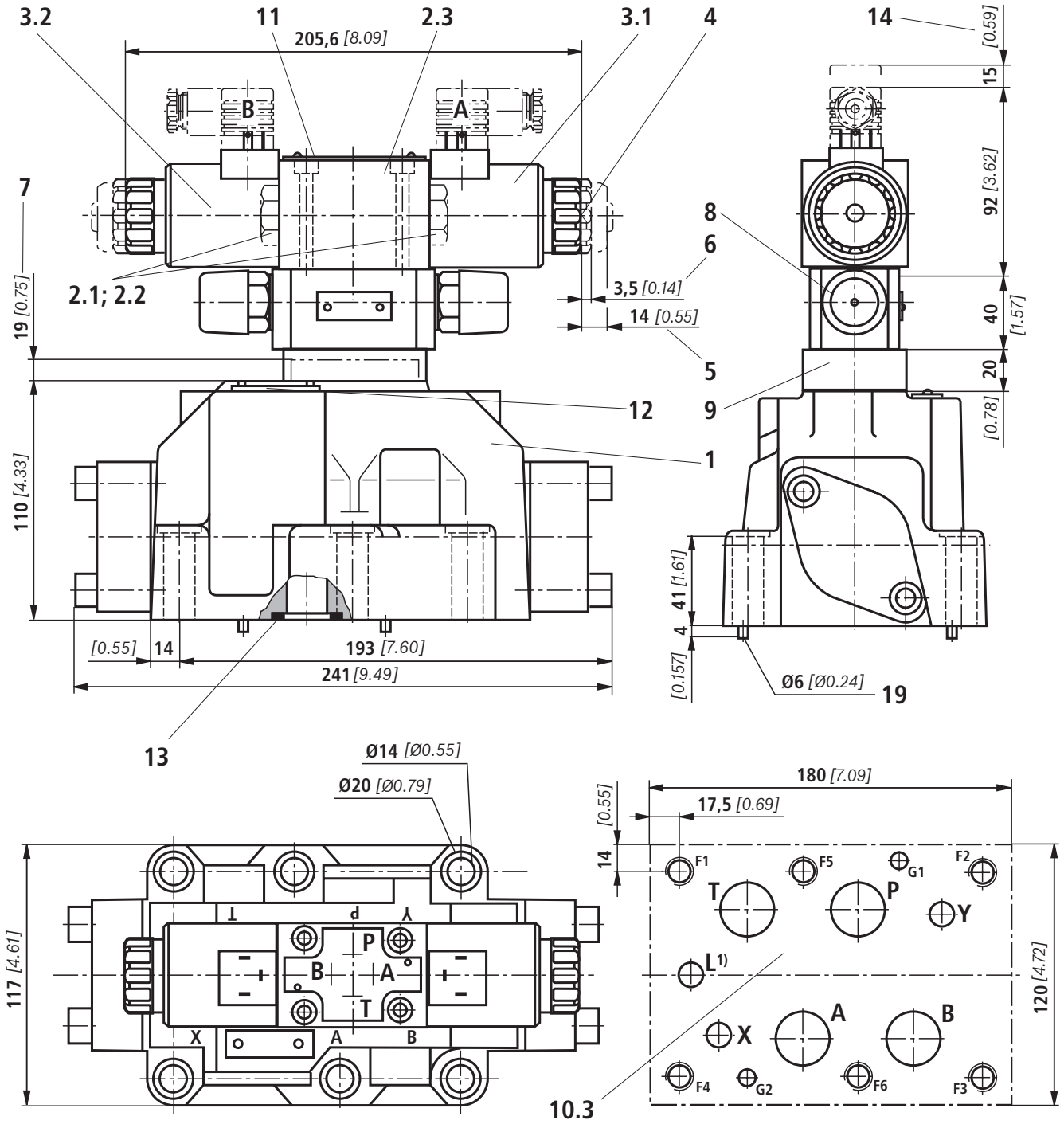

1) Port L only on valves with pressure-centered zero position

For the explanation of items and subplates, see page 32.
For valve mounting screws, see page 33.

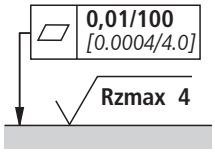

Required surface quality
of the valve mounting face

Unit dimensions: NG25 (type W.H **25**) (dimensions in mm *[inch]*)

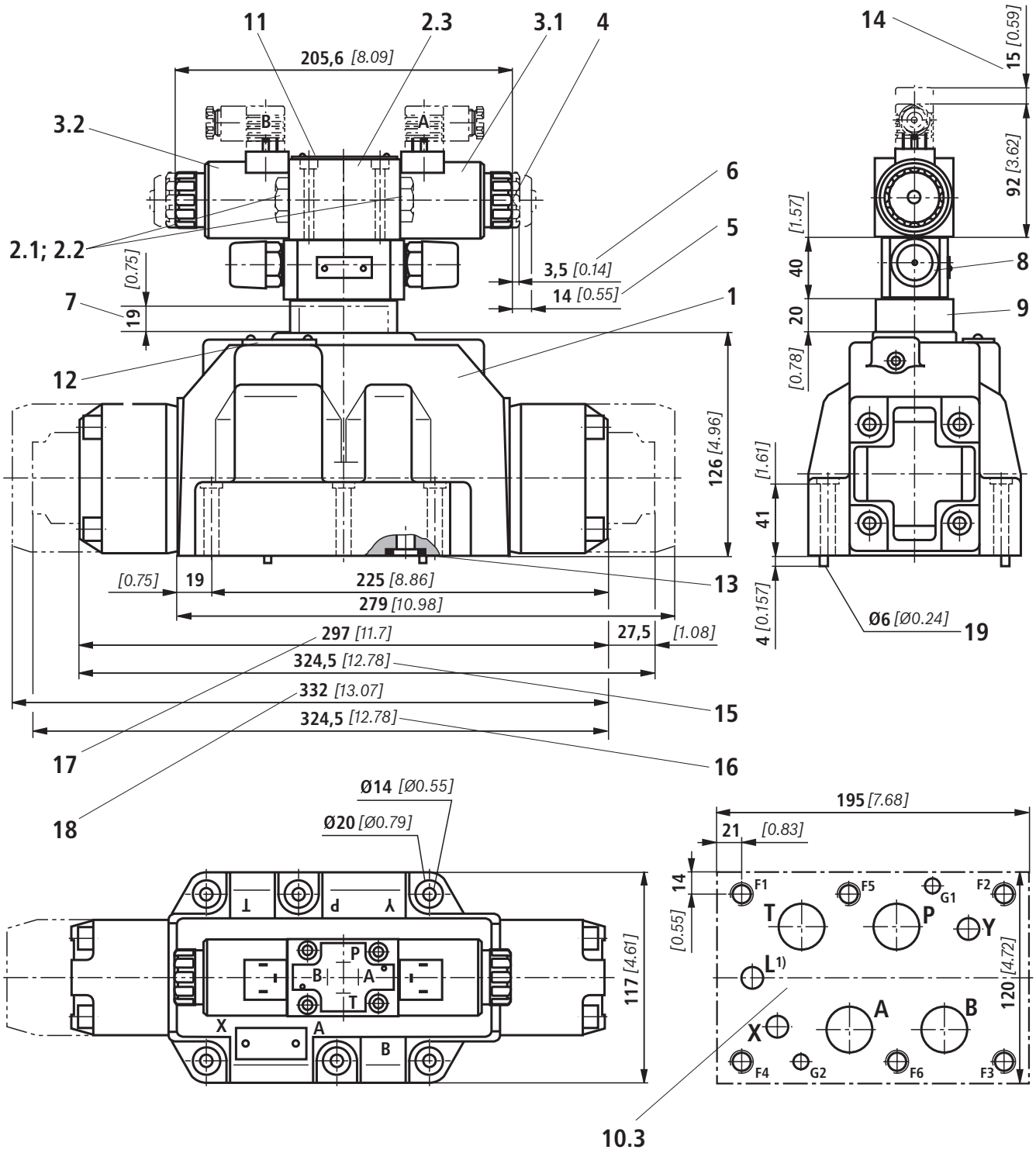

1) Port L only on valves with pressure-centered zero position

For the explanation of items and subplates, see page 32.
For valve mounting screws, see page 33.

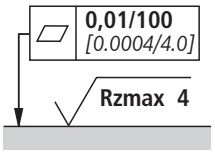

Required surface quality
of the valve mounting face

Unit dimensions: NG32 (dimensions in mm *[inch]*)

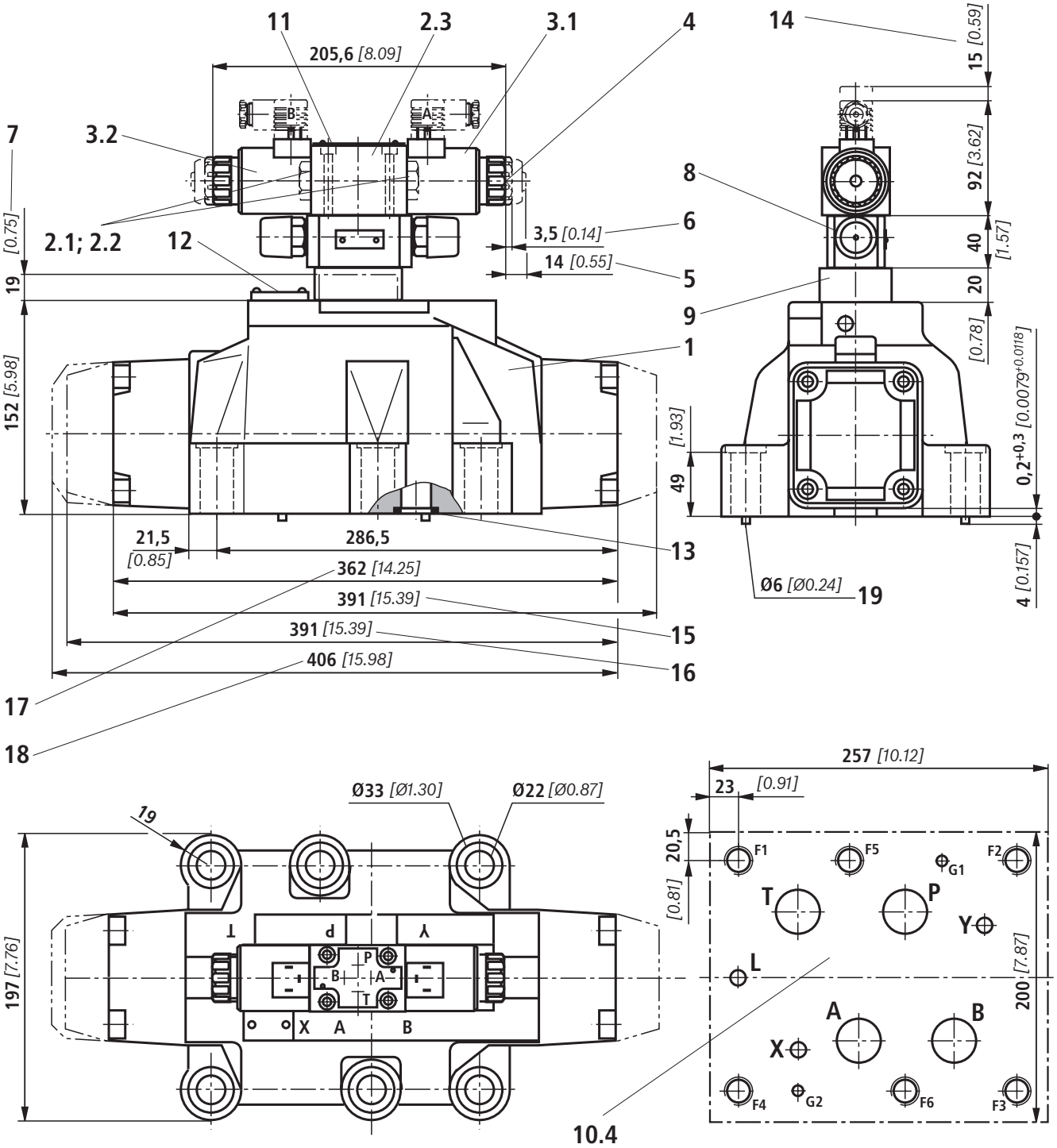

For the explanation of items and subplates, see page 32.
For valve mounting screws, see page 33.

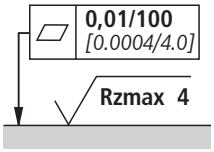

Required surface quality
of the valve mounting face

Unit dimensions

1 Main valve

2 Pilot valve type 4WE 6 …
to data sheet RE 23178:

2.1 – Pilot valve type 4WE 6 D… (1 solenoid)
for main valves with spools C, D, K, Z
spools HC, HD, HK, HZ

– Pilot valve type 4WE 6 JA… (1 solenoid “a“)
for main valves with spools EA, FA, etc.,
spring return

– Pilot valve type 4WE 6 MT… (1 solenoid “a“)
for main valves with spools HEA, HFA, etc.,
hydraulic Spool return

2.2 – Pilot valve type 4WE 6 Y… (1 solenoid)
for main valves with spool Y
spool HY

– Pilot valve type 4WE 6 JB… (1 solenoid “b“)
for main valves with spools EB, FB, etc.,
spring return

– Pilot valve type 4WE 6 MB… (1 solenoid “b“)
for main valves with spools HEB, HFB, etc.,
hydraulic spool return

2.3 – Pilot valve type 4WE 6 J… (2 solenoids)
for main valves with 3 spool positions, spring-centered

– Pilot valve type 4WE 6 M… (2 solenoids)
for main valves with 3 spool positions,
pressure-centered

3.1 Solenoid “a“

3.2 Solenoid “b“

4 Manual override “N“, optional

– The manual override can only be actuated up to a tank pressure of ca. 50 bar. Avoid damage to the bore for the manual override! (Special tool for operation, separate order, Material no. **R900024943**). When the manual override is blocked, operation of the solenoids must be ruled out!

– The simultaneous operation of the solenoids must be ruled out!

5 Solenoid **without** manual override

6 Solenoid **with** manual override

7 Height of reconnection plate for hydraulic operation (type 4WH…)

8 Switching time adjustment (6 A/F), optional

9 Pressure reducing valve, optional

10.1 Machined valve mounting face; porting pattern to ISO 4401-05-05-0-05 and NFPA T3.5.1 R2-D05

10.2 Machined valve mounting face; porting pattern to ISO 4401-07-07-0-05 and NFPA T3.5.1 R2-D07

10.3 Machined valve mounting face; porting pattern to ISO 4401-08-08-0-05 and NFPA T3.5.1 R2-D08

10.4 Machined valve mounting face; porting pattern to ISO 4401-10-09-0-05 and NFPA T3.5.1 R2-D10

11 Nameplate of pilot valve

12 Nameplate of complete valve

13 Seal rings

14 Space required to remove mating connector

15 2-position valves with spring end position in main valve (spool symbols A, C, D, K, Z)

16 2-position valves with spring end position in main valve (spool symbols B, Y)

17 3-position valves, spring-centered;
2-position valves with hydraulic end position in main valve

18 3-position valves, pressure-centered

19 Locating pin

Subplates (separate order)

– NG10 (to data sheet RE 45054)
- **Without** ports X, Y: G 534/01 (G3/4)
  G 534/12 (SAE-12; 1 1/16-12) [1)]
- **With** port X, Y: G 535/01 (G3/4)
  G 536/01 (G1)
  G 535/12 (SAE-12; 1 1/16-12) [1)]
  G 536/12 (SAE-16; 1 5/16-12) [1)]

– NG16 (to data sheet RE 45056)
G 172/01 (G3/4)
G 172/02 (M27 x 2)
G 174/01 (G1)
G 174/02 (M33 x 2)
G 174/08 (flange)
G 172/12 (SAE-12; 1 1/16-12) [1)]
G 174/12 (SAE-16; 1 5/16-12) [1)]

– NG25 (type W.H 22 to data sheet RE 45058)
G 151/01 (G1)
G 154/01 (G1 1/4)
G 156/01 (G1 1/2)
G 155/12 (SAE-16; 1 5/16-12) [1)]
G 154/12 (SAE-20; 1 5/8-20) [1)]
G 156/12 (SAE-24; 1 7/8-20) [1)]

– NG25 (type W.H 25 to data sheet RE 45058)
G 151/01 (G1)
G 153/01 (G1), for valves with pressure-centered zero position
G 154/01 (G1 1/4)
G 154/08 (flange)
G 156/01 (G1 1/2)
G 153/12 (SAE-16; 1 5/16-12) [1)]
G 154/12 (SAE-20; 1 5/8-20) [1)]
G 156/12 (SAE-24; 1 7/8-20) [1)]

– NG32 (to data sheet RE 45060)
G 157/01 (G1 1/2)
G 157/02 (M48 x 2)
G 158/10 (flange)
G 157/12 (SAE-24; 1 7/8-12) [1)]

[1)] on request

For valve mounting screws, see page 33.

Unit dimensions

Valve mounting screws (separate order)

– NG10:
4 hexagon socket head cap screws, metric
ISO 4762 - M6 x 45 - 10.9-flZn-240h-L
(Friction coefficient μ_{total} = 0.09 to 0.14);
tightening torque M_T = 12.5 Nm *[9.2 ft-lbs]* ±10%,
Material no. **R913000258**

4 hexagon socket head cap screws, UNC
1/4-20 UNC x 1 3/4" ASTM-A574
on request

– NG16:
4 hexagon socket head cap screws, metric
ISO 4762 - M10 x 60 - 10.9-flZn-240h-L
(Friction coefficient μ_{total} = 0.09 to 0.14);
tightening torque M_T = 75 Nm *[55.3 ft-lbs]* ±10%,
Material no. **R913000116**

2 hexagon socket head cap screws metric
ISO 4762 - M6 x 60 - 10.9-flZn-240h-L
(Friction coefficient μ_{total} = 0.09 to 0.14);
tightening torque M_T = 12.5 Nm *[9.2 ft-lbs]* ±10%,
Material no. **R913000115**

4 hexagon socket head cap screws, UNC
3/8-16 UNC x 2 1/4" ASTM-A574
on request

2 hexagon socket head cap screws, UNC
1/4-20 UNC x 2 1/4" ASTM-A574
on request

– NG25:
6 hexagon socket head cap screws, metric
ISO 4762 - M12 x 60 - 10.9-flZn-240h-L
(Friction coefficient μ_{total} = 0.09 to 0.14);
tightening torque M_T = 130 Nm *[95.9 ft-lbs]* ±10%,
Material no. **R913000121**

6 hexagon socket head cap screws, UNC
1/2-13 UNC x 2 1/2" ASTM-A574
on request

– NG32:
6 hexagon socket head cap screws, metric
ISO 4762 - M20 x 80 - 10.9-flZn-240h-L
(Friction coefficient μ_{total} = 0.09 to 0.14);
tightening torque M_T = 430 Nm *[317.2 ft-lbs]* ±10%,
Material no. **R901035246**

6 hexagon socket head cap screws, UNC
3/4-10 UNC x 3 1/4" ASTM-A574
on request

Stroke adjustment, attachment options (dimensions in mm *[inch]*)

The stroke adjustment feature limits the stroke of control spool (1). To reduce the spool stroke, loosen locknut (2) and turn adjustment screw (3) clockwise. Control chamber (4) must be depressurized during this process.

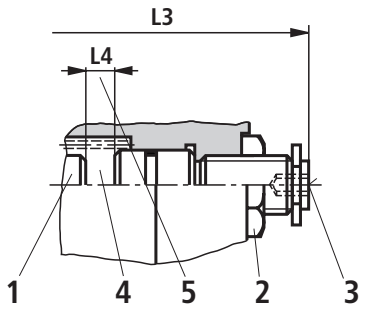

NG	L4
10	6,5 *[0.26]*
16	10 *[0.39]*
25 (type 4W.H 22)	9,5 *[0.37]*
25 (type 4W.H 25)	12,5 *[0.49]*
32	15 *[0.59]*

For further dimensions, see below and page 35.

5 Adjustment range
- NG10:
  1 turn = 1 mm *[0.0394 inch]* adjustment travel
- NG16 and 32:
  1 turn = 1.5 mm *[0.0591 inch]* adjustment travel

Stroke limitation on side A

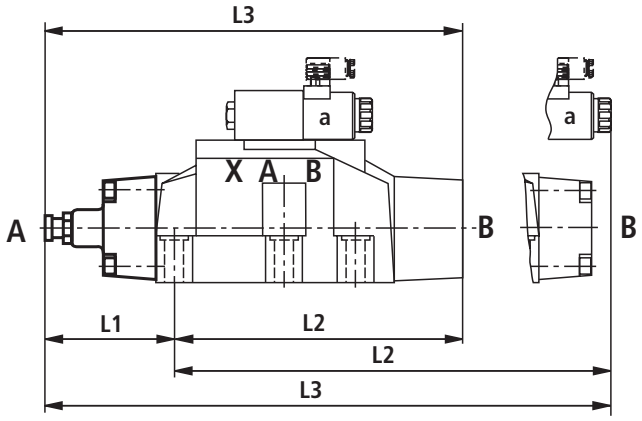

Stroke limitation on side B

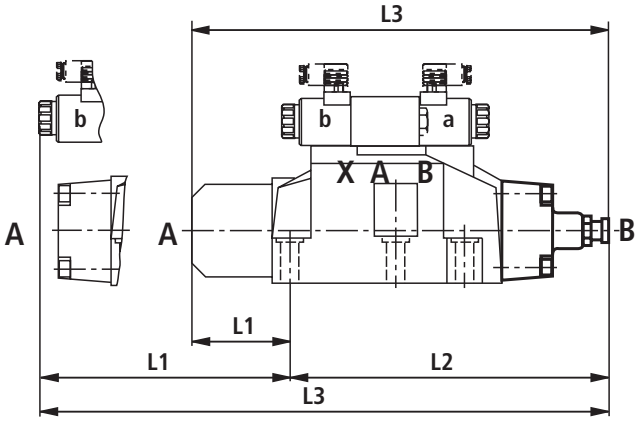

Attachment options	Ordering code	NG	3-position valve [1] Spring-centered L1	L2	L3	Pressure-centered L1	L2	L3
Stroke adjustment on valve sides A and B	10	10	90 *[3.54]*	144 *[5.67]*	234 *[9.21]*			
		16	100 *[3.94]*	200 *[7.87]*	300 *[11.81]*			
		25 [1]	96 *[3.77]*	241 *[9.49]*	337 *[13.27]*			
		25 [2]	123 *[4.84]*	276 *[10.87]*	399 *[15.71]*			
		32	133 *[5.24]*	344 *[13.54]*	477 *[18.78]*			
Stroke adjustment on valve side A	11	10	90 *[3.54]*	106 *[4.17]*	196 *[7.72]*			
		16	100 *[3.94]*	156 *[6.14]*	256 *[10.08]*			
		25 [1]	96 *[3.77]*	193 *[7.60]*	289 *[11.38]*			
		25 [2]	123 *[4.84]*	225 *[8.86]*	348 *[13.70]*			
		32	133 *[5.24]*	287 *[11.30]*	420 *[16.54]*			
Stroke adjustment on valve side B	12	10	52 *[2.05]*	144 *[5.67]*	196 *[7.72]*	–	–	–
		16	56 *[2.20]*	200 *[7.87]*	256 *[10.08]*	81 *[3.19]*	200 *[7.87]*	281 *[11.06]*
		25 [1]	48 *[1.89]*	241 *[9.49]*	289 *[11.38]*	–	–	–
		25 [2]	72 *[2.83]*	276 *[10.87]*	348 *[13.70]*	107 *[4.21]*	276 *[10.87]*	283 *[11.14]*
		32	76 *[2.99]*	344 *[13.54]*	420 *[16.54]*	120 *[4.72]*	344 *[13.54]*	464 *[18.27]*

[1] With spool symbol A, only version “11“ possible, with spool symbol B, only version “12“ .

Stroke adjustment, attachment options (dimensions in mm *[inch]*)

Attachment options	Ordering code	NG	2-position valve								
			Spring end position						Hydraulic end position		
			A, C, D, K, Z			B, Y			HC, HD, HK, HZ, HY		
			L1	L2	L3	L1	L2	L3	L1	L2	L3
Stroke adjustment on valve sides A and B	**10**	10	–	–	–	–	–	–	90 *[3.54]*	144 *[5.67]*	234 *[9.21]*
		16	–	–	–	–	–	–	100 *[3.94]*	200 *[7.87]*	300 *[11.81]*
		25 [1]	96 *[3.78]*	241 *[9.49]*	337 *[13.27]*	96 *[3.78]*	241 *[9.49]*	337 *[13.27]*	96 *[3.78]*	241 *[9.49]*	337 *[13.27]*
		25 [2]	–	–	–	–	–	–	123 *[4.84]*	276 *[10.87]*	399 *[15.71]*
		32	–	–	–	–	–	–	133 *[5.24]*	344 *[13.54]*	477 *[18.78]*
Stroke adjustment on valve side A	**11**	10	90 *[3.54]*	106 *[4.17]*	196 *[7.72]*	–	–	–	90 *[3.54]*	106 *[4.17]*	196 *[7.72]*
		16	100 *[3.94]*	180 *[7.09]*	280 *[11.02]*	–	–	–	100 *[3.94]*	156 *[6.14]*	256 *[10.08]*
		25 [1]	96 *[3.78]*	193 *[7.60]*	289 *[11.38]*	96 *[3.78]*	193 *[7.60]*	289 *[11.38]*	96 *[3.78]*	193 *[7.60]*	289 *[11.38]*
		25 [2]	123 *[4.84]*	253 *[9.96]*	376 *[14.8]*	–	–	–	123 *[4.84]*	225 *[8.86]*	348 *[13.70]*
		32	133 *[5.24]*	316 *[12.44]*	449 *[17.68]*	–	–	–	133 *[5.24]*	287 *[11.30]*	420 *[16.53]*
Stroke adjustment on valve side B	**12**	10	–	–	–	52 *[2.05]*	144 *[5.67]*	196 *[7.72]*	52 *[2.05]*	144 *[5.67]*	196 *[7.72]*
		16	–	–	–	80 *[3.15]*	200 *[7.87]*	280 *[11.02]*	56 *[2.21]*	200 *[7.87]*	256 *[10.08]*
		25 [1]	48 *[1.89]*	241 *[9.49]*	289 *[11.38]*	48 *[1.89]*	241 *[9.49]*	289 *[11.38]*	48 *[1.89]*	241 *[9.49]*	289 *[11.38]*
		25 [2]	–	–	–	100 *[3.94]*	276 *[10.87]*	376 *[14.80]*	72 *[2.84]*	276 *[10.87]*	348 *[13.70]*
		32	–	–	–	105 *[4.13]*	344 *[13.54]*	449 *[17.68]*	76 *[2.99]*	344 *[13.54]*	420 *[16.53]*

[1] Types 4WEH 22… and 4WH 22…

[2] Types 4WEH 25… and 4WH 25…

Switching time adjustment

The switching time of main valve (1) can be influenced by using a double throttle check valve (2)
(type Z2FS 6 to data sheet RE 27506).

Conversion of meter-in (3) into meter-out control (4):

Remove pilot valve (5) – plate (6) for accommodating the seal rings remains in place – turn switching time adjustment feature (2) around its longitudinal axis and put it down again, re-mount pilot valve (5) .

Tightening torque of screws (7) M_T = 9 Nm *[6.6 ft-lbs]*.

⚠ Attention!

The conversion may only be carried out by authorized specialists or in the factory!

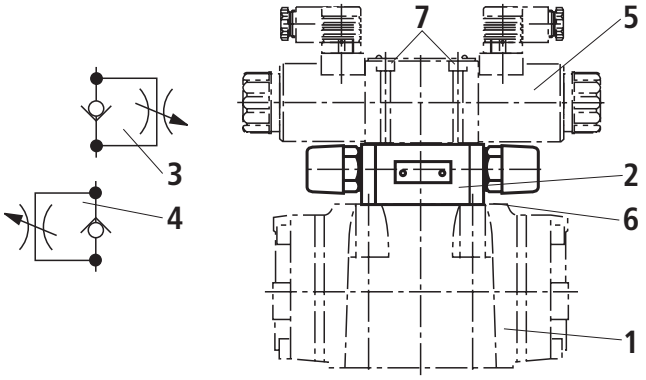

Type 4WEH 10 ..4X/…S
Type 4WEH 10 ..4X/…S2

Pressure reducing valve “D3“

Pressure reducing valve (8) must be used in the case of a pilot pressure above 250 bar *[3626 psi]* (with type 4WEH 22 …: 210 bar *[3046 psi]*) and version “H-“.

The secondary pressure is held constant at 45 bar *[652 psi]*.

⚠ Attention!

When a pressure reducing valve “D3“ (8) is used, a throttle insert “B10“ must be provided in the P channel of the pilot valve.

Tightening torque of screws (7) M_T = 9 Nm *[6.6 ft-lbs]*.

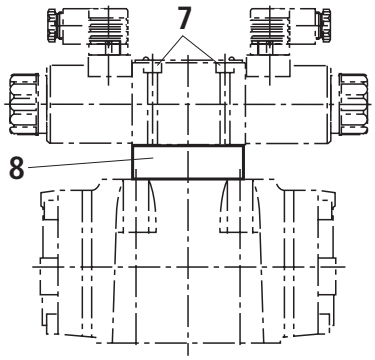

Type 4WEH 10 ..4X/…/..D3

Pre-load valve (not for NG10)

For valves with pressureless circulation and internal pilot oil supply, a pre-load valve (9) must be installed in channel P of the main valve to build up the minimum pilot pressure.

The pressure differential of the pre-load valve must be added to the pressure differential of the main valve (see characteristic curves) to obtain a total value.

The cracking pressure is ca. 4.5 bar *[65 psi]*.

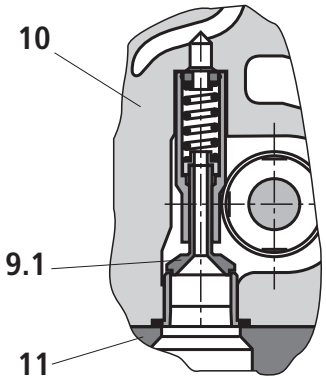

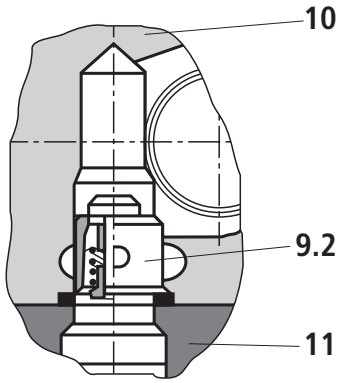

9.1 Pre-load valve NG16

9.2 Pre-load valve NG25 and NG32

10 Main valve

11 Suplate

Type	Material number P4,5
4W.H **16** …	R901002365
4W.H **22** …	R900315596
4W.H **25** …	R900303717
4W.H **32** …	R900317066

***Δp–q*$_V$ characteristic curve** (measured with HLP46, ϑ_{oil} = 40 °C ± 5 °C *[104 °F ±9 °F]*)

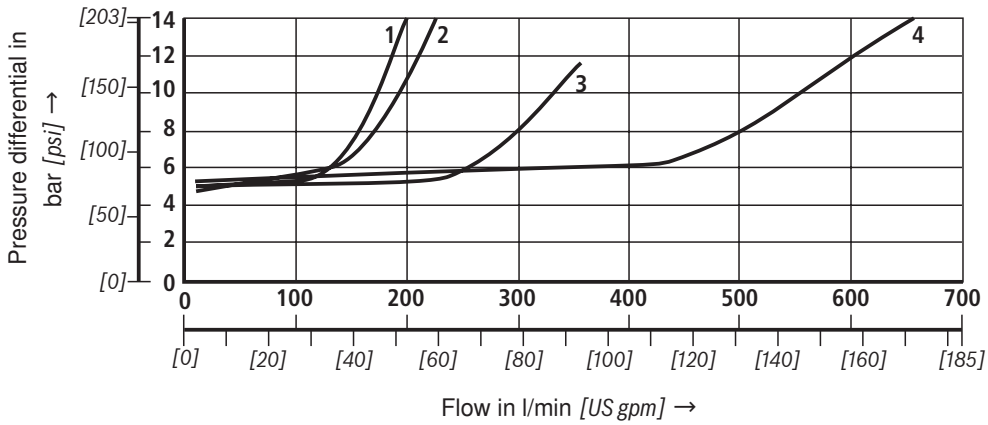

1 **NG16**

2 **NG25** (type 4W.H **25** …)

3 **NG25** (type 4W.H **22** …)

4 **NG32**

Notes

Bosch Rexroth AG
Hydraulics
Zum Eisengießer 1
97816 Lohr am Main, Germany
Phone +49 (0) 93 52 / 18-0
Fax +49 (0) 93 52 / 18-23 58
documentation@boschrexroth.de
www.boschrexroth.de

Notes

Bosch Rexroth AG
Hydraulics
Zum Eisengießer 1
97816 Lohr am Main, Germany
Phone +49 (0) 93 52 / 18-0
Fax +49 (0) 93 52 / 18-23 58
documentation@boschrexroth.de
www.boschrexroth.de

Notes

Bosch Rexroth AG
Hydraulics
Zum Eisengießer 1
97816 Lohr am Main, Germany
Phone +49 (0) 93 52 / 18-0
Fax +49 (0) 93 52 / 18-23 58
documentation@boschrexroth.de
www.boschrexroth.de