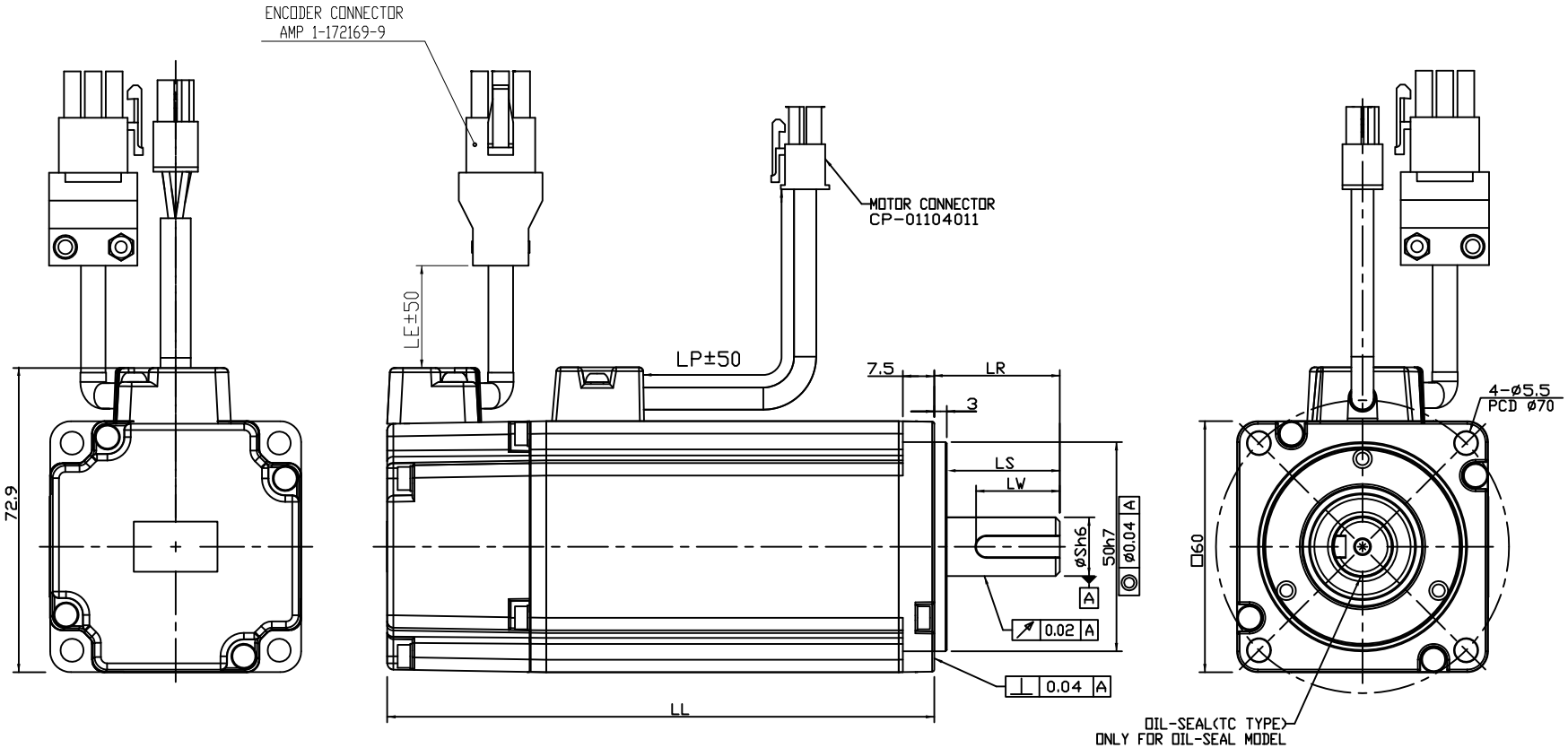

DIMENSION TABLE (MODEL WITHOUT BRAKE)

MODEL	LL	LR	LS	S	LW	WK	W	T	RH	TP	LP	LE
ECMA-C□0602AS	105.5	30	27.0	14	—	—	—	—	—	M4, Depth 15	300	300
ECMA-C□0602CS												
ECMA-C□0602ES					20	5	5	5	11.0	—		
ECMA-C□0602GS												
ECMA-C□0602PS					20	5	5	5	11.0	M4, Depth 15		
ECMA-C□0602RS												
ECMA-C□0604AS	130.7	30	27.0	14	—	—	—	—	—	M4, Depth 15		
ECMA-C□0604CS												
ECMA-C□0604ES					20	5	5	5	11.0	—		
ECMA-C□0604GS												
ECMA-C□0604PS					20	5	5	5	11.0	M4, Depth 15		
ECMA-C□0604RS												

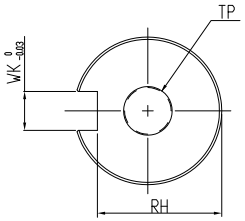

SHAFT END DETAILS

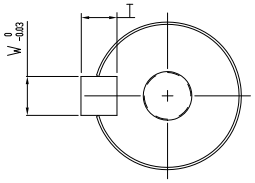

KEY DETAILS

REV.	ECN NO.

台達電子工業股份有限公司
DELTA ELECTRONICS, INC.

DRAWN: | DESIGN:
APPROVE: | DATE: 10/21/2013

THESE DRAWINGS AND SPECIFICATIONS ARE THE PROPERTY OF DELTA ELECTRONICS, INC. AND SHALL NOT BE REPRODUCED OR USED AS THE BASIS FOE THE MANUFACTURE OR SELL OF APPARATUSES OR DEVICES WITHOUT PERMISSION.

DIMENSIONAL TOLERANCES

( )	( )	( )	( )	ANGLES
DECIMALS <50 ±0.1	<50 ±0.15	<50 ±0.2	<30° ±0.1°	
X ±0.3	>50~100 ±0.15	>50~100 ±0.2	>50~100 ±0.25	>30°~60°±0.3°
X.X ±0.2	>100~200±0.2	>100~200±0.25	>100~200±0.3	>60°~90°±0.5°
X.XX±0.1	>200~ ±0.2%	>200~ ±0.25%	>200~ ±0.3%	

DESCRIPTION: CONFIDENTIAL
MOTOR_F60

A3 SIZE | THIRD ANGLE PROJECTION | PART NO.: | REV. 00

USED ON | UNIT mm | SCALE | SHEET 1 OF1

FRAME NAME: DF-MFA3H-3R02.DWG