We reserve all rights to this drawing, to any patents or patent registrations related hereto, and to the duplication, retransmission by third parties and misc. use. Any use of this drawing is not permitted without the written consent of STABILUS.

Intended for internal use and customer

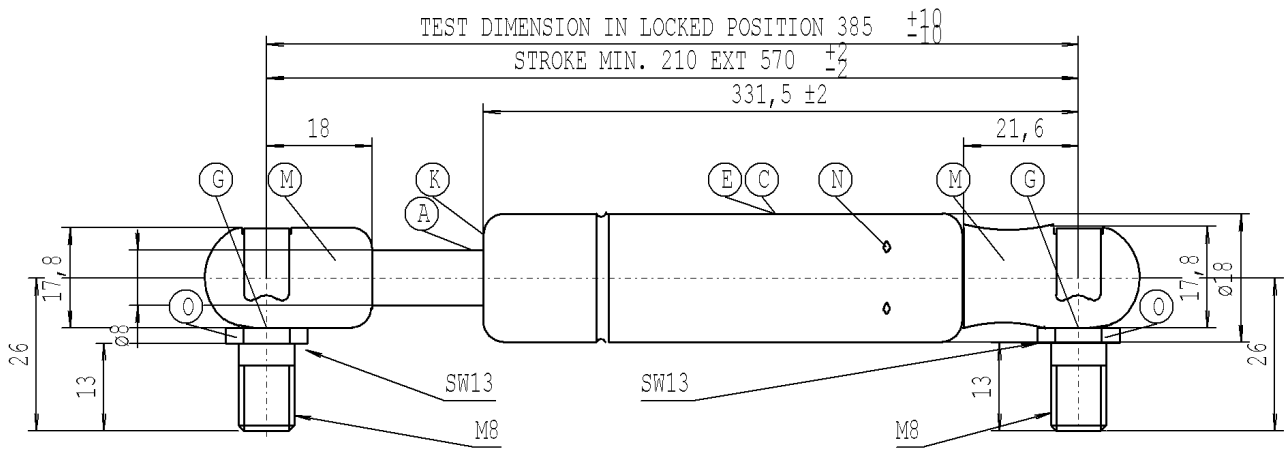

STABILUS
INTER-STOP

NICHT OEFFNEN HOHER DRUCK
DO NOT OPEN HIGH PRESSURE
STABILUS STANDARD

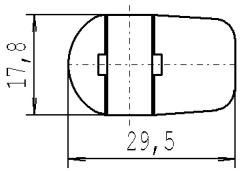

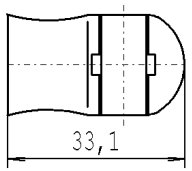

- -the Gas Spring must not be mechanically modified or damaged.
- -The warning label must not be removed or obscured.
- -Dynamic damping choke cross section continuous becoming less in direction of extension.
- -Line up connections permissible deviation ± 5 DEG
- -Extension speed measured according to STAB-Spec. 10006487
- -Spring test with piston rod downwards
- -Protect piston rod from dirt, paint and damage
- -Disposal acc. to STAB-Spec.10009375
- -Drawing not true-to-scale
- -Observe installation instructions according to STAB-Spec. 10005593
- -Component testing gas spring acc. STAB-Spec. 10010035
- -Ball socket to suit ball stud DIN 71803 ø10
- -Disassemble ball-stud to STAB-Spec.10006399
- -Installation: Preferably with piston rod down
- -Permissible operating temperature range -30°C to +80°C
- -compression and extension force measured acc. to STAB-Spec. 10014634

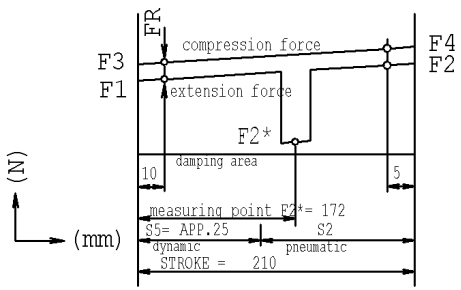

X=F2/F1=1,24
FRmax=F3-F1

A	Nislide black
C	print white
E	black painted
G	greased
K	inner side of the border flange oiled
M	releasing torque:min. 3Nm
N	dinks permissible
O	black passivated

Unregistered Copy
Print-out is not subject to the modification service

Forces

F1 (N)	F2* (N)	F4 max (N)	F2 (N)	FR max (N)
extension-Forces	reduced extension force	compression-Forces	extension-Forces	friction
120±15	-56±80	220	150±30	45
SPEED				
Stat.	Stat.	Stat.	Stat.	Stat.

CHANGE		
NEW	SERIE	UMST. KUZA
OLD	VERSUCH	-
CHG.NO.	676740	678110
NAME	12.03.19 SCHNASS	25.4.19 SCHAEFER
NO.	1	2

DIMENSIONS WITHOUT TOLERANCE +/-1

INTER-STOP

03 71 0816 10 218

STABILUS

Modifications in favour of technical process reserved

DRAWING		CHECKED	
DATE	17.12.2018	NAME	C.Imbria

Document No. 10260817

732334

E

***** Druckdatum: 26.04.2019 / 08:38:23 ***** Ausdruck nicht massstabtreu *****